880 RPM
Selection Chart

Model Number	Bowl Dia, (in.)	Peak Eff. (full dia.)	BEP Flow (gpm)	BEP Head (ft./ stage)	BEP NPSHr (full dia.)	POR (gpm)	Ns	Nss
SM14L	14.00	83.4	1052	16.0	4.75	736-1262	3568	8871
SM14M	14.00	84.5	1122	20.4	4.60	785-1346	3071	9384
SM14H	14.00	84.5	1128	23.6	4.37	790-1354	2760	9779
SM14HH	14.00	83.5	1469	22.6	6.04	1028-1763	3254	8754
SM16MO	15.25	86.0	1874	23.8	7.63	1312-2249	3535	8298
SM16HO	15.25	86.0	2242	25.9	8.64	1569-2690	3629	8268
SM16M	15.25	85.0	1979	23.4	7.81	1385-2375	3680	8379
SM16H	15.25	86.0	2242	27.0	6.89	1569-2960	3518	9798
SM20M	19.25	85.0	3135	38.5	13.1	2195-3762	3188	7156
SM20H	19.25	85.0	3404	40.7	12.9	2383-4085	3186	7543
SM24M	23.50	81.9	5288	43.5	15.5	3702-6346	3778	8192
SM24H	23.50	85.6	6719	50.8	24.9	4703-8063	3791	6471
SM28H	27.00	88.0	11234	64.2	25.6	7864-13481	4112	8195

v18.1

SIMFLO®

Section 204
Date 7/5/11

SM14L

880 RPM

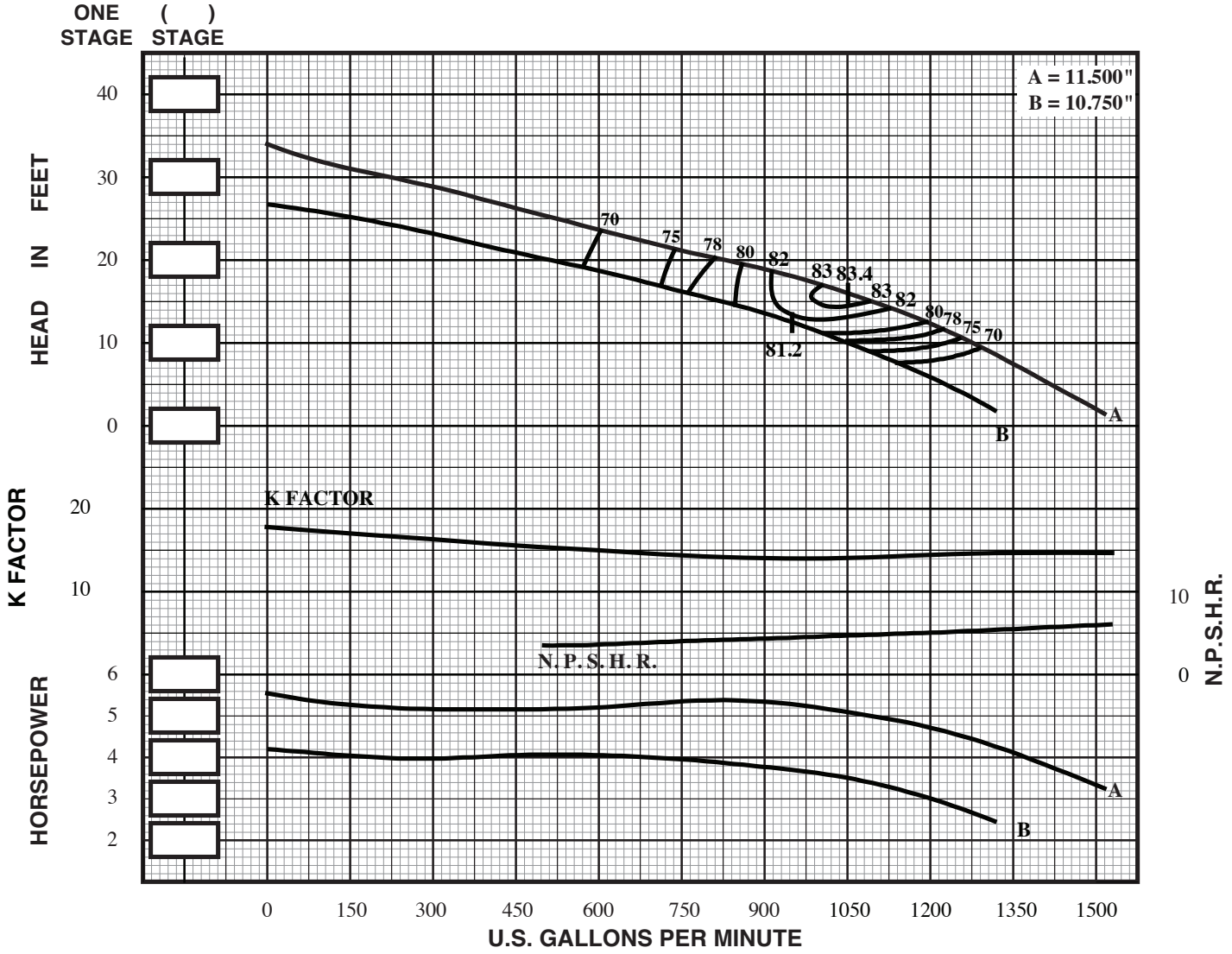

IMPELLER TYPE	= ENCLOSED	STD. SHAFT DIA.	= 2.187"	NO. STAGES	EFF. CHANGE	MATERIAL	B.E.P. EFF. CHANGE
IMPELLER NO.	= SM14L	MAX. SHAFT DIA.	= 2.187"				
IMPELLER WT. - LBS.	= 27.4	STD. LATERAL	= 1.31"	1	-3	IMP. - C.I.	0
ONE STAGE WT. - LBS.	= 540.0	DISCHARGE SIZES	= 10" / 12"	2	-2	IMP. - NI-RI	-2
ADD'L STAGE WT. - LBS.	= 225.0	SUCTION SIZES	= 10" / BELL	3	-1	IMP. - S.S.	-2
MAX. SPHERE SIZE	= 1.31"	ONE STAGE WR^2	= 1.933	4	0	BOWL - BRZ.	-1
MIN. SUBMERGENCE*	= 19"		=	5	0	BOWL - NI-RI	-1
Δ CONSULT FACTORY			v18.1			BOWL - S.S.	-2

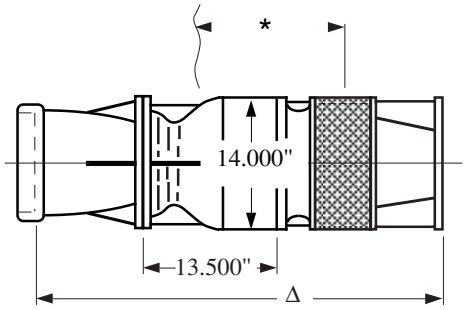

SUBMERSIBLE TURBINE

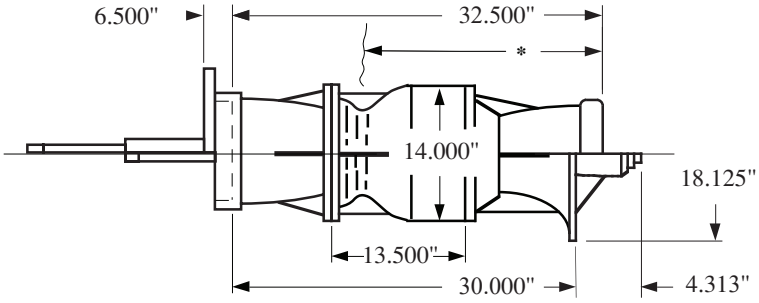

LINESHAFT TURBINE

SIMFLO®

Section 204
Date 9/1/06

SM14M

880 RPM

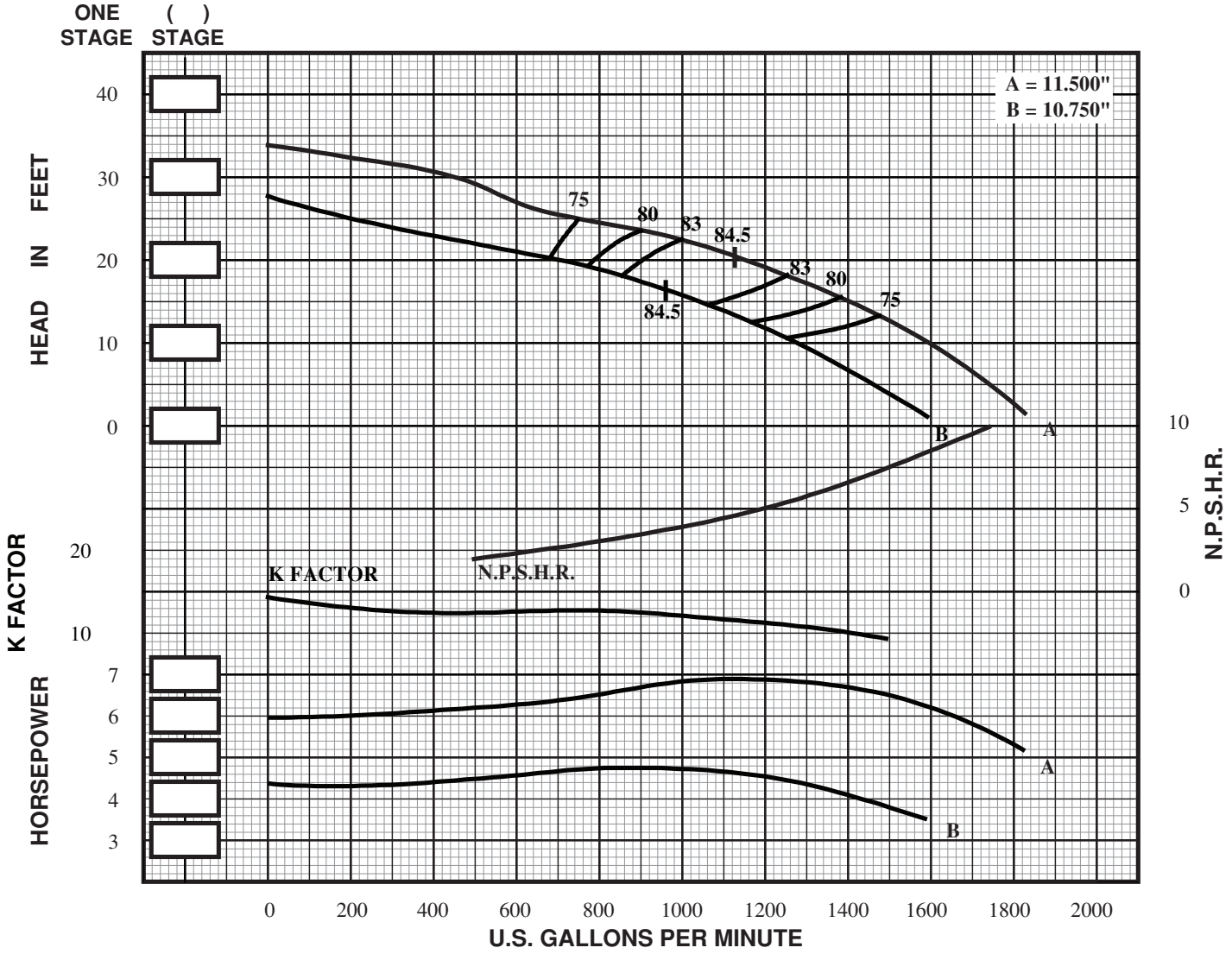

				NO. STAGES	EFF. CHANGE	MATERIAL	B.E.P. EFF. CHANGE
IMPELLER TYPE	= ENCLOSED	STD. SHAFT DIA.	= 2.187"				
IMPELLER NO.	= SM14M	MAX. SHAFT DIA.	= 2.187"				
IMPELLER WT. - LBS.	= 31.7	STD. LATERAL	= 1.31"	1	-3	IMP. - C.I.	0
ONE STAGE WT. - LBS.	= 550.0	DISCHARGE SIZES	= 10"/ 12"	2	-1	IMP. - NI-RI	-2
ADD'L STAGE WT. - LBS.	= 235.0	SUCTION SIZES	= 10"/ BELL	3	0	IMP. - S.S.	-2
MAX. SPHERE SIZE	= 1.31"	ONE STAGE WR^2	= 2.182	4	0	BOWL - BRZ.	-2
MIN. SUBMERGENCE*	= 19"		=	5	0	BOWL - NI-RI	-1
Δ CONSULT FACTORY			v18.1			BOWL - S.S.	-2

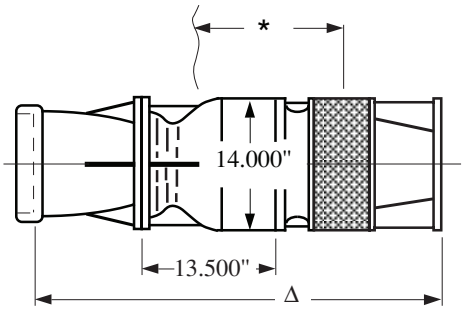

SUBMERSIBLE TURBINE

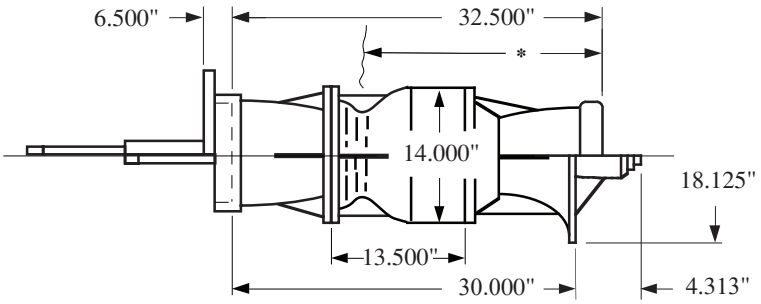

LINESHAFT TURBINE

SIMFLO®

Section 204
Date 9/1/06

SM14H

880 RPM

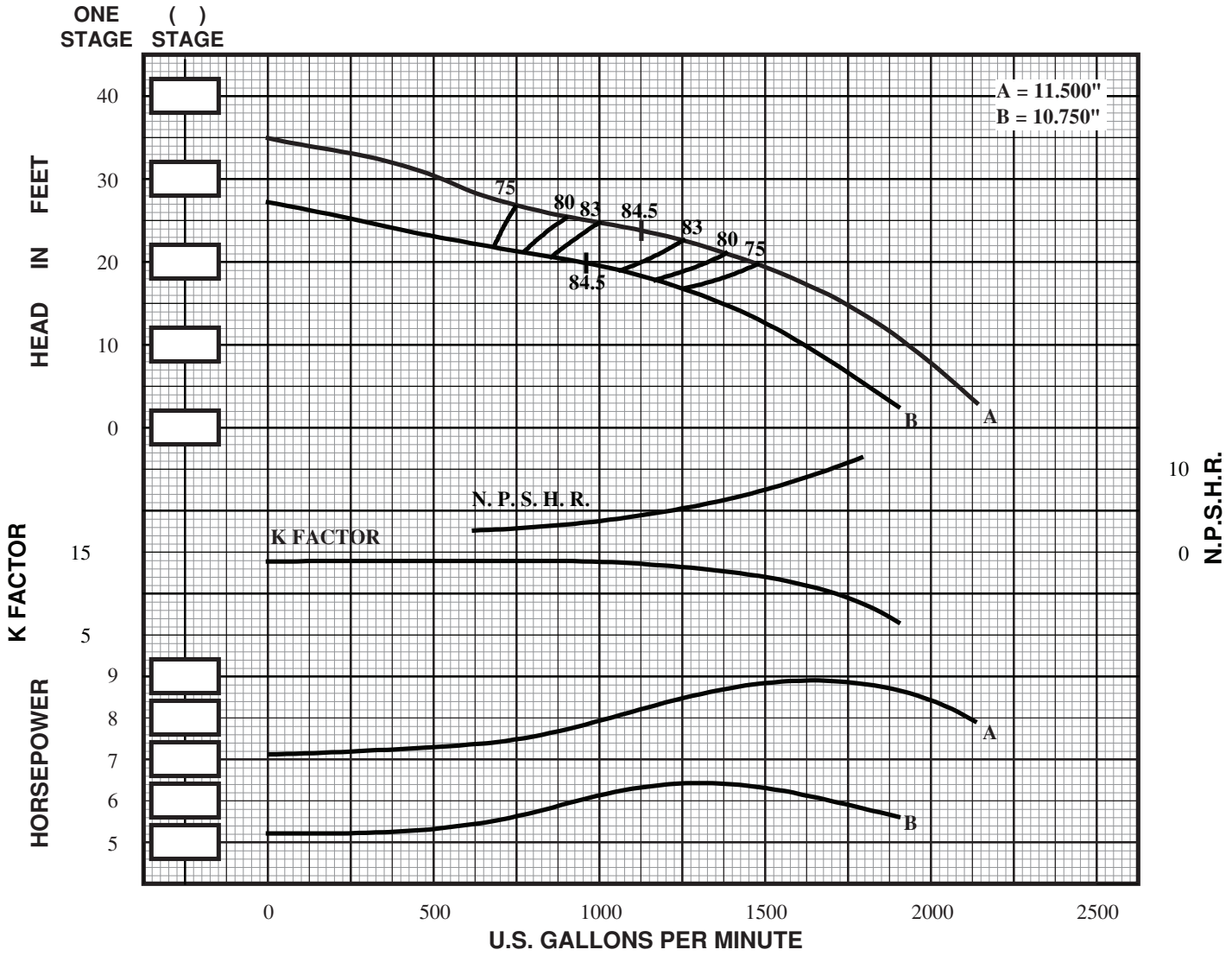

				NO. STAGES	EFF. CHANGE	MATERIAL	B.E.P. EFF. CHANGE
IMPELLER TYPE	= ENCLOSED	STD. SHAFT DIA.	= 2.187"				
IMPELLER NO.	= SM14H	MAX. SHAFT DIA.	= 2.187"				
IMPELLER WT. - LBS.	= 29.0	STD. LATERAL	= 1.31"	1	-2	IMP. - C.I.	0
ONE STAGE WT. - LBS.	= 550.0	DISCHARGE SIZES	= 10"/ 12"	2	-1	IMP. - NI-RI	-2
ADD'L STAGE WT. - LBS.	= 235.0	SUCTION SIZES	= 10"/ BELL	3	0	IMP. - S.S.	-2
MAX. SPHERE SIZE	= 1.56"	ONE STAGE WR^2	= 2.023	4	0	BOWL - BRZ.	-1
MIN. SUBMERGENCE*	= 19"		=	5	0	BOWL - NI-RI	-1
Δ CONSULT FACTORY			v18.1			BOWL - S.S.	-2

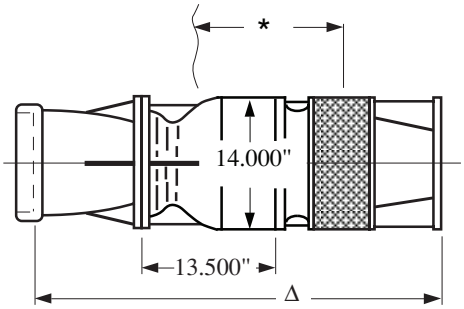

SUBMERSIBLE TURBINE

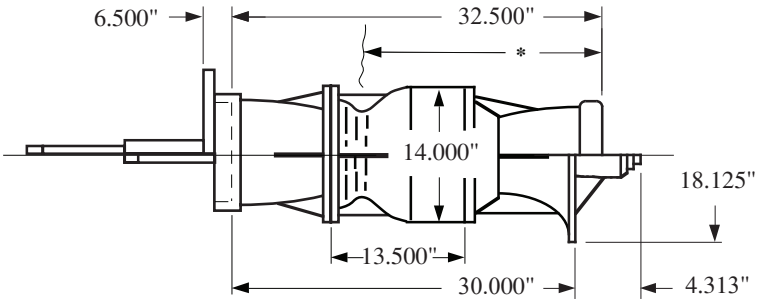

LINESHAFT TURBINE

SIMFLO®

Section 204
Date 9/1/06

SM14HH

880 RPM

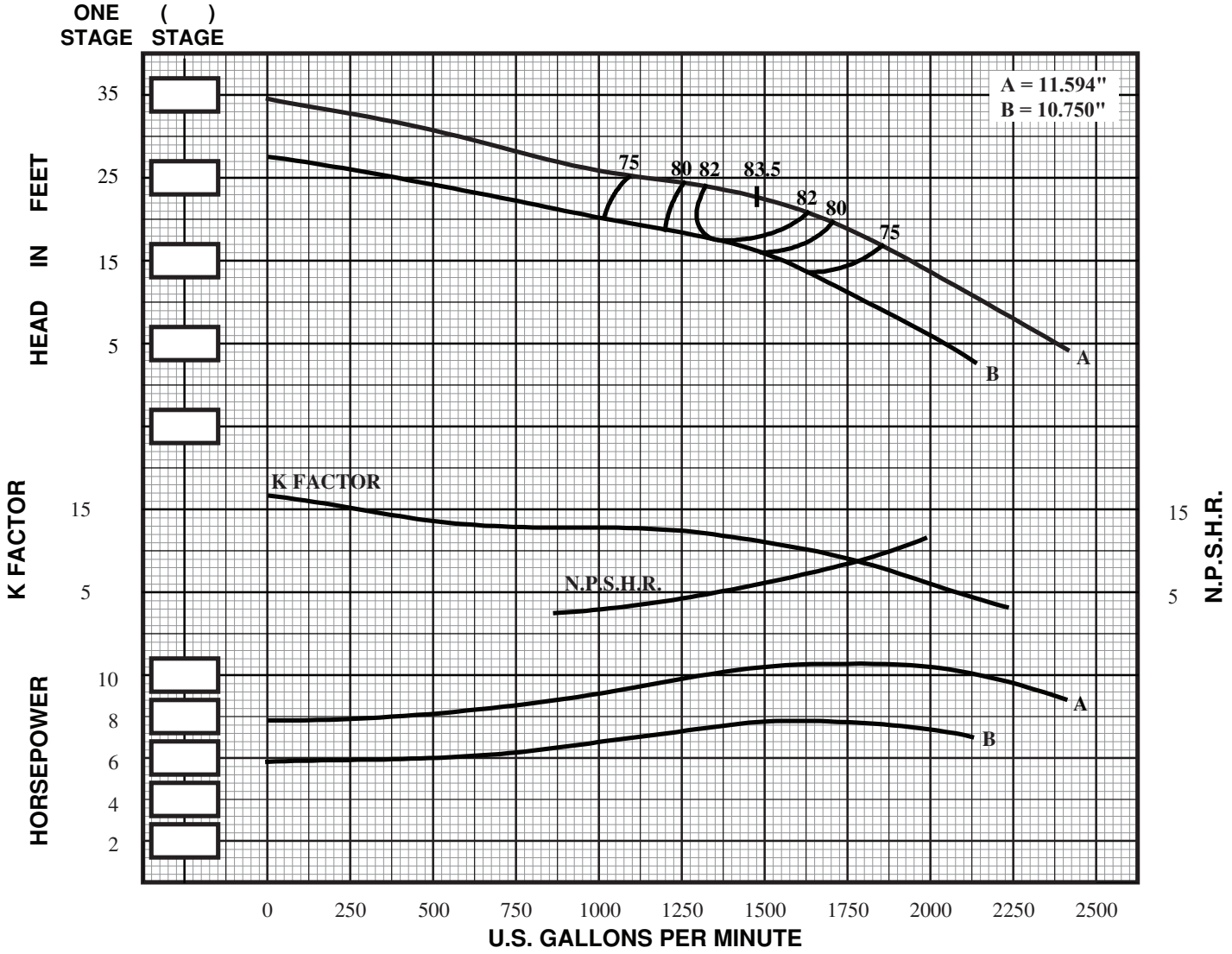

IMPELLER TYPE	= ENCLOSED	STD. SHAFT DIA.	= 2.187"	NO. STAGES	EFF. CHANGE	MATERIAL	B.E.P. EFF. CHANGE
IMPELLER NO.	= SM14HH	MAX. SHAFT DIA.	= 2.187"				
IMPELLER WT. - LBS.	= 28.4	STD. LATERAL	= 1.25"	1	-2.5	IMP. - C.I.	-5
ONE STAGE WT. - LBS.	= 540	DISCHARGE SIZES	= 10"/ 12"	2	-1.5	IMP. - NI-RI	-2
ADD'L STAGE WT. - LBS.	= 225	SUCTION SIZES	= 10"/ BELL	3	-.5	IMP. - S.S.	-3
MAX. SPHERE SIZE	= 1.25"	ONE STAGE WR^2	= 2.300	4	0	BOWL - BRZ.	-1
MIN. SUBMERGENCE*	= 19"		=	5	0	BOWL - NI-RI	-1
Δ CONSULT FACTORY			v18.1			BOWL - S.S.	-2

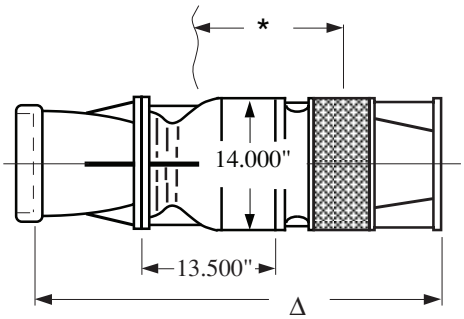

SUBMERSIBLE TURBINE

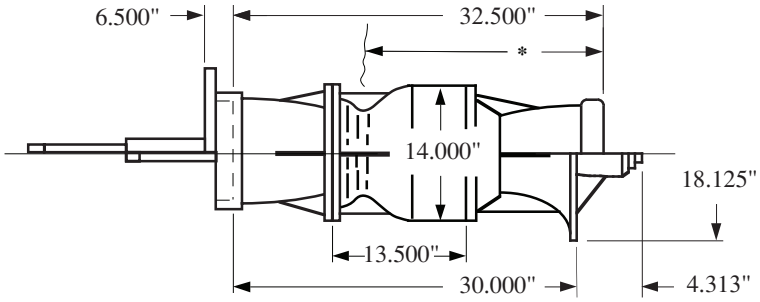

LINESHAFT TURBINE

SIMFLO®

Section 204
Date 9/1/06

SM16MO

880 RPM

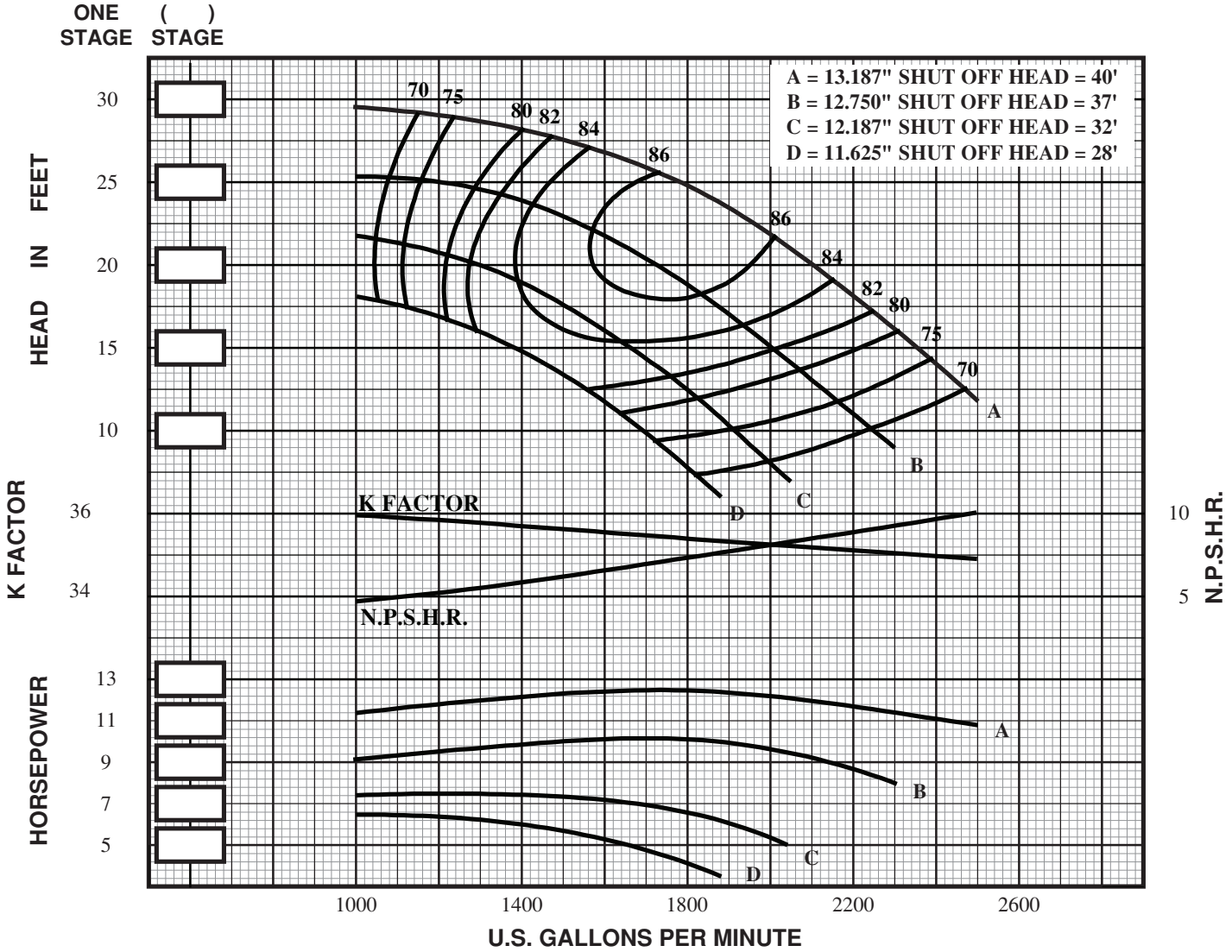

				NO. STAGES	EFF. CHANGE	MATERIAL	B.E.P. EFF. CHANGE
IMPELLER TYPE	= SEMI-OPEN	STD. SHAFT DIA.	= 2.187"				
IMPELLER NO.	= SM16MO	MAX. SHAFT DIA.	= 2.187"				
IMPELLER WT. - LBS.	= 24.0	STD. LATERAL	= 1.34"	1	-3	IMP. - C.I.	0
ONE STAGE WT. - LBS.	= 600.0	DISCHARGE SIZES	= 12"/ 14"	2	-2	IMP. - NI-RI	-2
ADD'L STAGE WT. - LBS.	= 250.0	SUCTION SIZES	= 12"/ BELL	3	-1	IMP. - S.S.	-1
MAX. SPHERE SIZE	= 1.19"	ONE STAGE WR^2	= 2.26	4	0	BOWL - BRZ.	-1
MIN. SUBMERGENCE*	= 35"		=	5	0	BOWL - NI-RI	-1
Δ CONSULT FACTORY			v18.1			BOWL - S.S.	-2

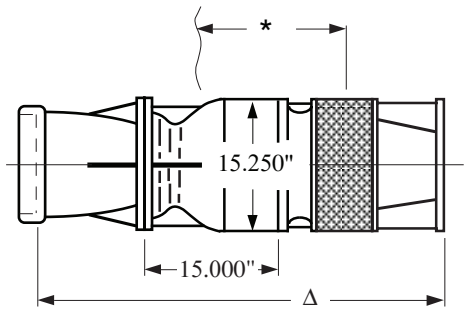

SUBMERSIBLE TURBINE

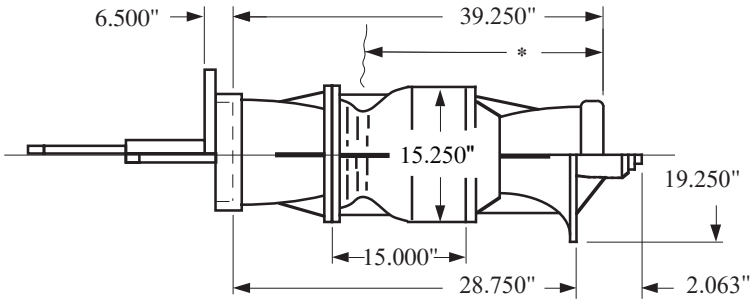

LINESHAFT TURBINE

SIMFLO®

Section 204
Date 9/1/06

SM16HO

880 RPM

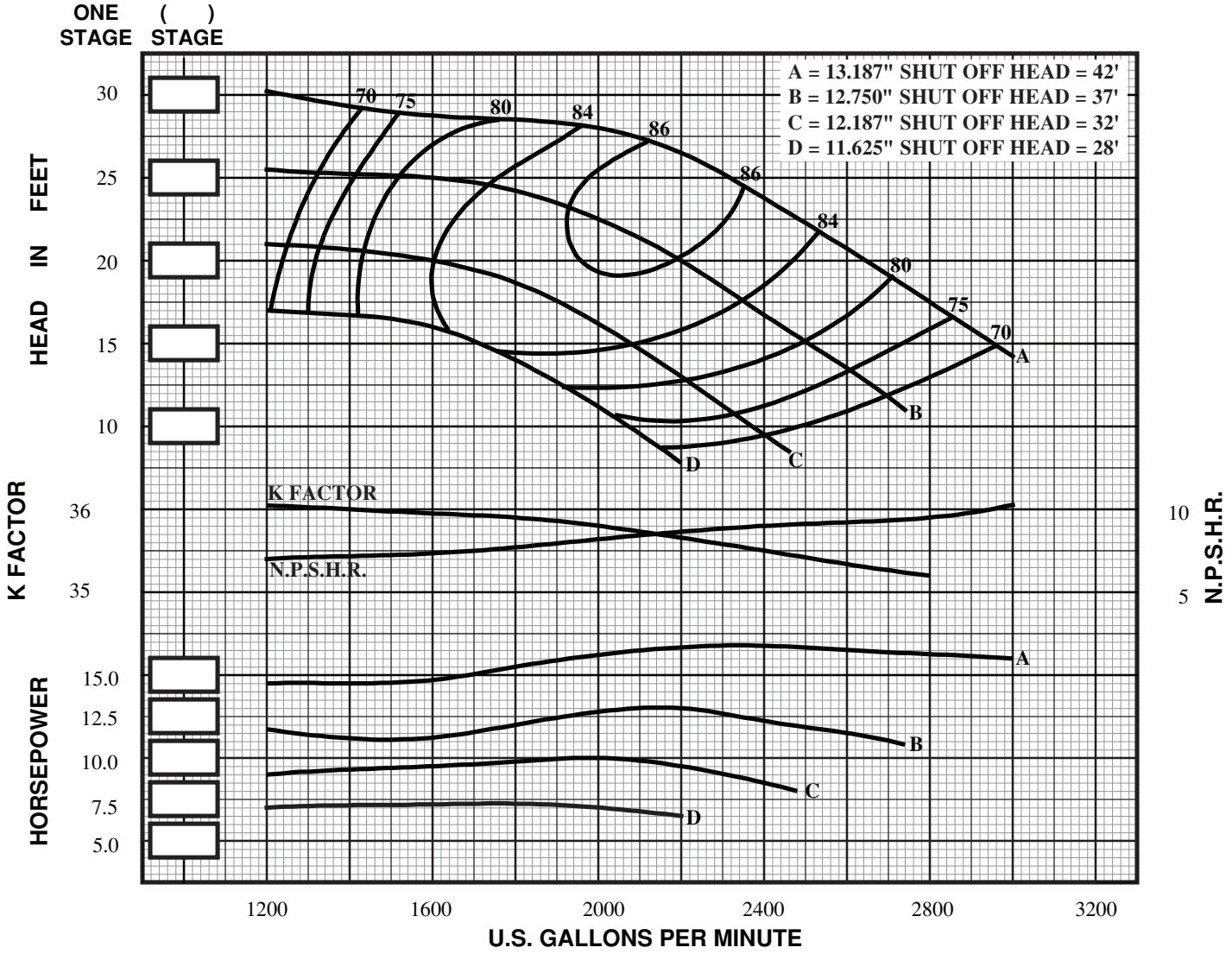

				NO. STAGES	EFF. CHANGE	MATERIAL	B.E.P. EFF. CHANGE
IMPELLER TYPE	= SEMI-OPEN	STD. SHAFT DIA.	= 2.187"				
IMPELLER NO.	= SM16HO	MAX. SHAFT DIA.	= 2.187"				
IMPELLER WT. - LBS.	= 25.0	STD. LATERAL	= 1.06"	1	-3	IMP. - C.I.	-3
ONE STAGE WT. - LBS.	= 600.0	DISCHARGE SIZES	= 12"/14"	2	-2	IMP. - NI-RI	-2
ADD'L STAGE WT. - LBS.	= 250.0	SUCTION SIZES	= 12"/ BELL	3	-1	IMP. - S.S.	-1
MAX. SPHERE SIZE	= 1.22"	ONE STAGE WR^2	= 2.240	4	0	BOWL - BRZ.	-2
MIN. SUBMERGENCE*	= 39"		=	5	0	BOWL - NI-RI	-1
Δ CONSULT FACTORY			v18.1			BOWL - S.S.	-2

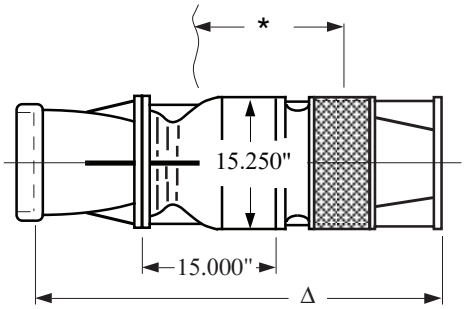

SUBMERSIBLE TURBINE

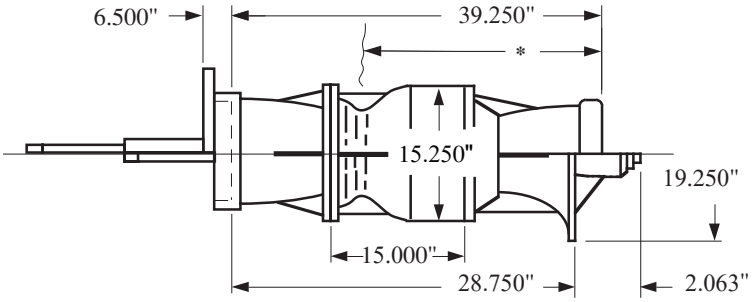

LINESHAFT TURBINE

SIMFLO®

Section 204
Date 9/1/06

SM16M

880 RPM

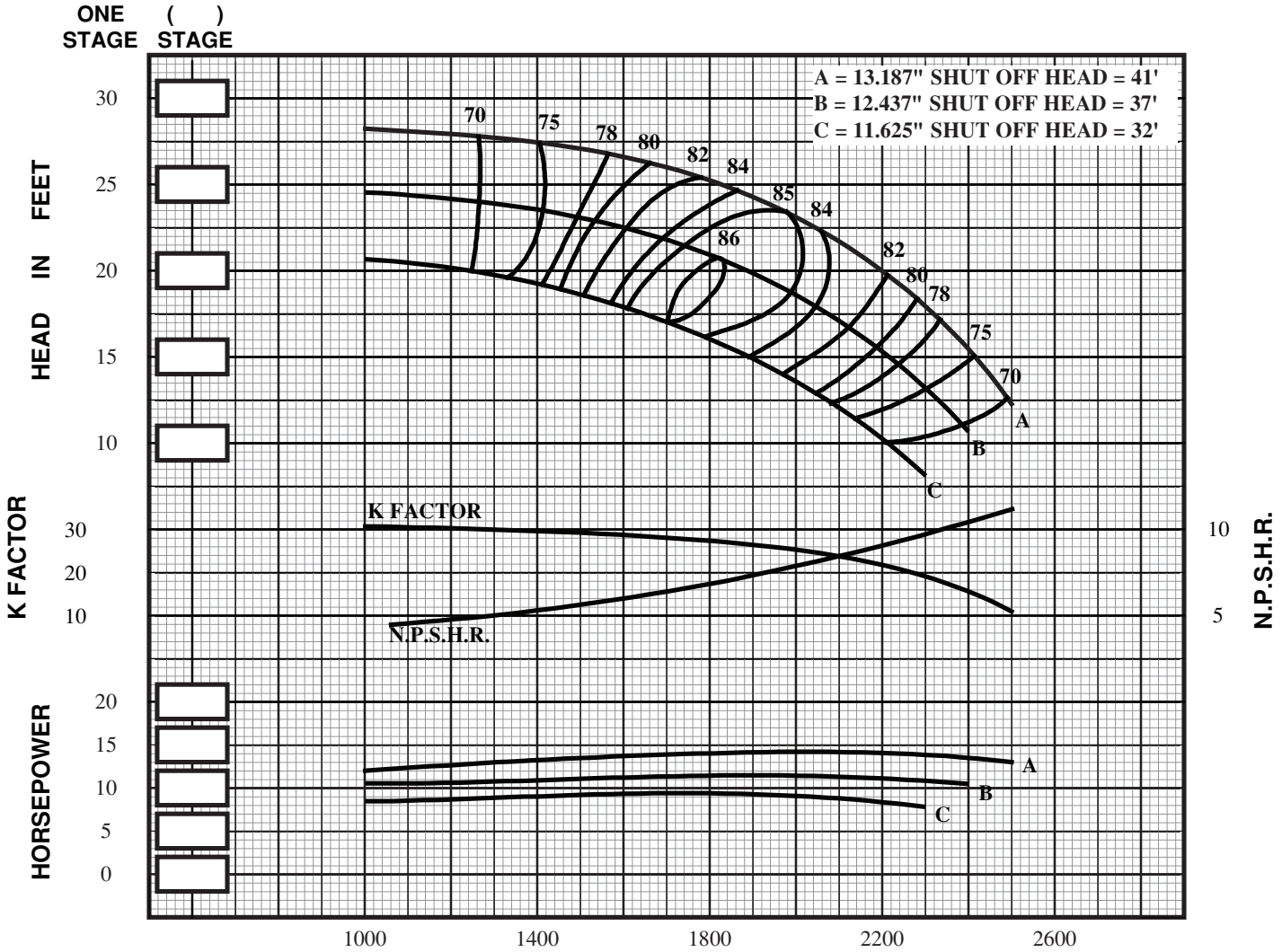

				NO. STAGES	EFF. CHANGE	MATERIAL	B.E.P. EFF. CHANGE
IMPELLER TYPE	= ENCLOSED	STD. SHAFT DIA.	= 2.187"				
IMPELLER NO.	= SM16M	MAX. SHAFT DIA.	= 2.187"				
IMPELLER WT. - LBS.	= 39.0	STD. LATERAL	= .94"	1	-3	IMP. - C.I.	0
ONE STAGE WT. - LBS.	= 600.0	DISCHARGE SIZES	= 12"/14"	2	-2	IMP. - NI-RI	-2
ADD'L STAGE WT. - LBS.	= 250.0	SUCTION SIZES	= 12"/ BELL	3	-1	IMP. - S.S.	-1
MAX. SPHERE SIZE	= 1.00"	ONE STAGE WR^2	= 4.966	4	0	BOWL - BRZ.	-1
MIN. SUBMERGENCE*	= 36"		=	5	0	BOWL - NI-RI	-1
Δ CONSULT FACTORY			v18.1			BOWL - S.S.	-2

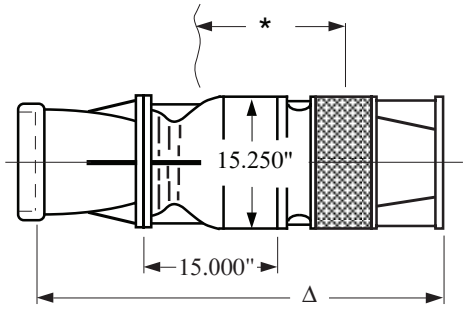

SUBMERSIBLE TURBINE

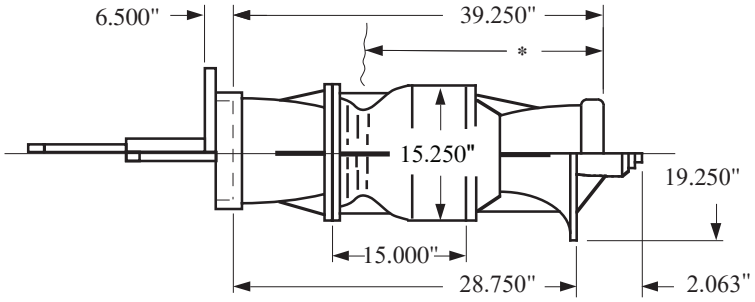

LINESHAFT TURBINE

SIMFLO®

Section 204
Date 9/1/06

SM16H

880 RPM

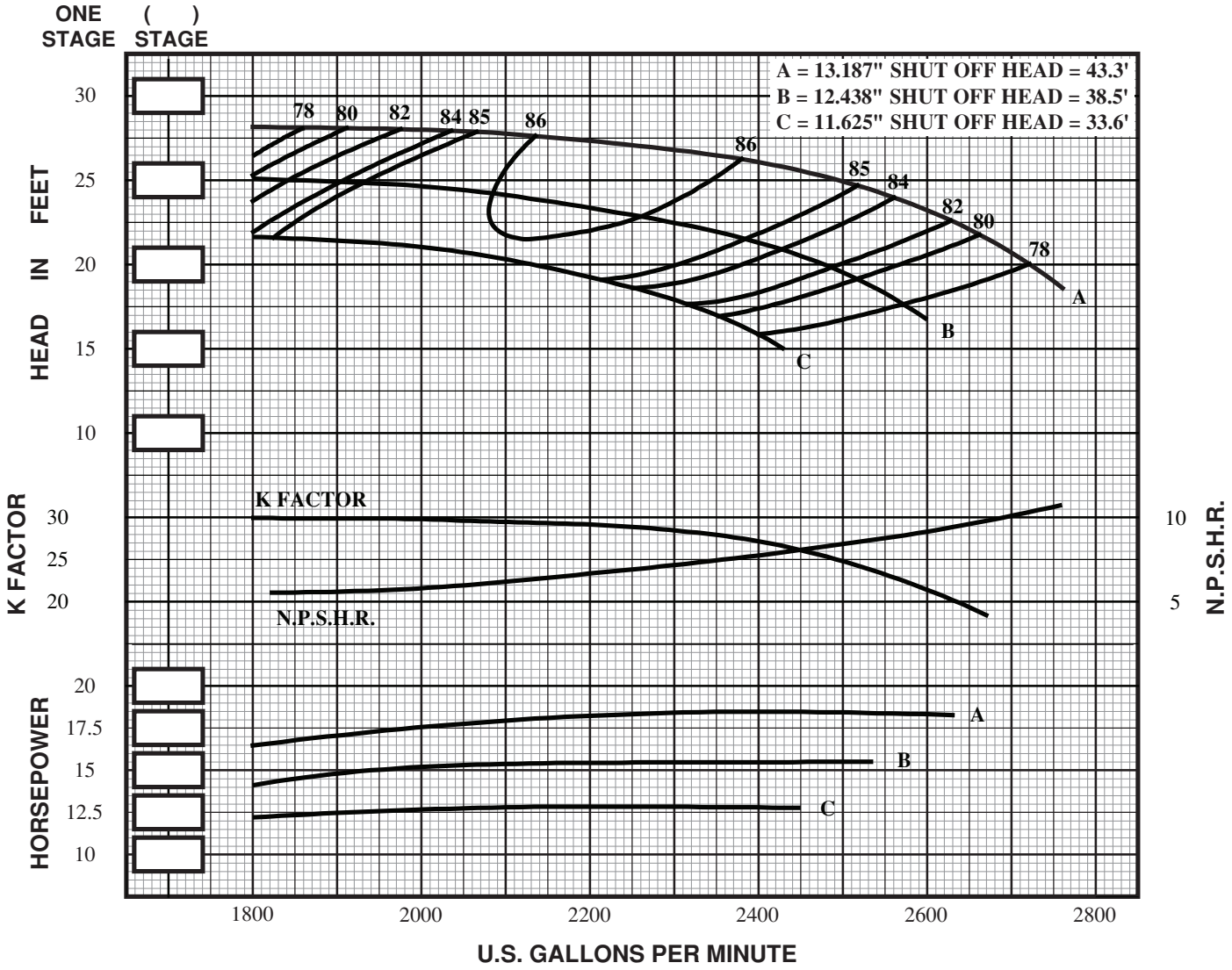

IMPELLER TYPE	= ENCLOSED	STD. SHAFT DIA.	= 2.187"	NO. STAGES	EFF. CHANGE	MATERIAL	B.E.P. EFF. CHANGE
IMPELLER NO.	= SM16H	MAX. SHAFT DIA.	= 2.187"				
IMPELLER WT. - LBS.	= 35.5	STD. LATERAL	= .94"	1	-3	IMP. - C.I.	-3
ONE STAGE WT. - LBS.	= 600.0	DISCHARGE SIZES	= 12"/ 14"	2	-2	IMP. - NI-RI	-2
ADD'L STAGE WT. - LBS.	= 250.0	SUCTION SIZES	= 12"/ BELL	3	-1	IMP. - S.S.	-1
MAX. SPHERE SIZE	= 1.38"	ONE STAGE WR^2	= 4.677	4	0	BOWL - BRZ.	-2
MIN. SUBMERGENCE*	= 39"		=	5	0	BOWL - NI-RI	-1
Δ CONSULT FACTORY			v18.1			BOWL - S.S.	-2

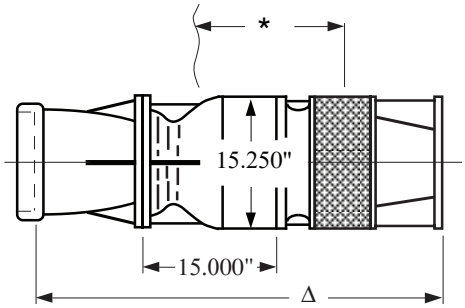

SUBMERSIBLE TURBINE

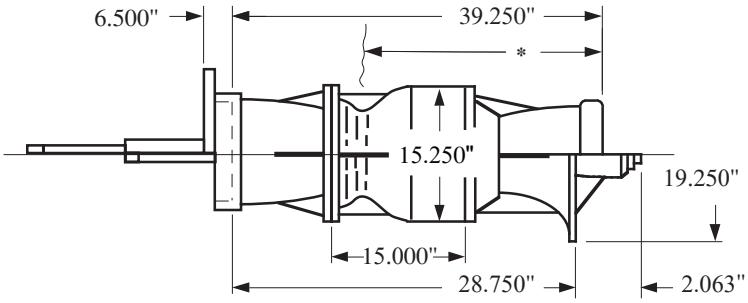

LINESHAFT TURBINE

SIMFLO®

Section 204
Date 9/1/06

SM20M

880 RPM

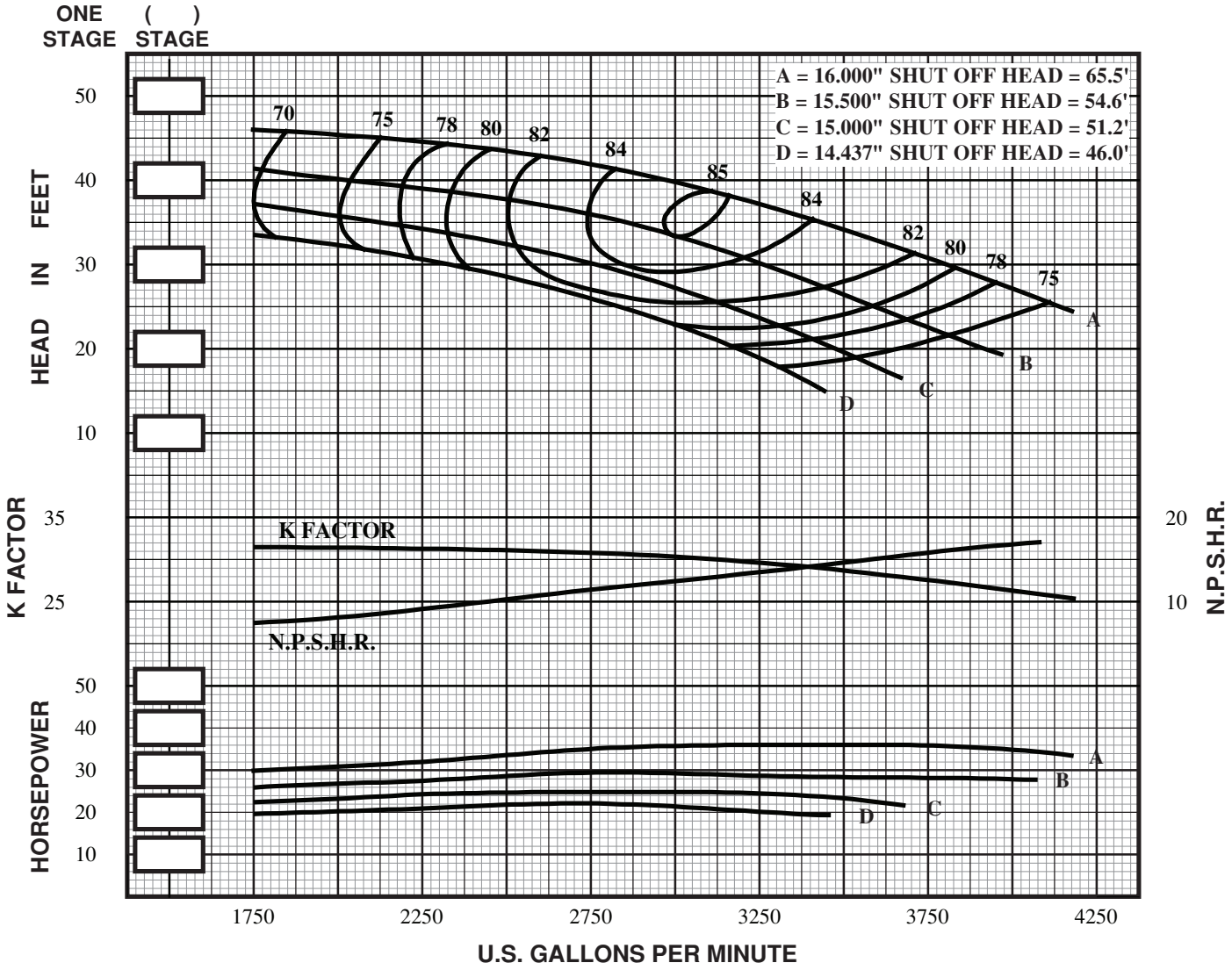

IMPELLER TYPE	= ENCLOSED	STD. SHAFT DIA.	= 2.437"	NO. STAGES	EFF. CHANGE	MATERIAL	B.E.P. EFF. CHANGE
IMPELLER NO.	= SM20M	MAX. SHAFT DIA.	= 2.437"				
IMPELLER WT. - LBS.	= 101.0	STD. LATERAL	= 1.50"	1	0	IMP. - C.I.	Δ
ONE STAGE WT. - LBS.	= 1000.0	DISCHARGE SIZES	= 16"/ Δ	2	0	IMP. - NI-RI	Δ
ADD'L STAGE WT. - LBS.	= 450.0	SUCTION SIZES	= BELL	3	0	IMP. - S.S.	Δ
MAX. SPHERE SIZE	= 1.22"	ONE STAGE WR^2	= 8.220	4	0	BOWL - BRZ.	Δ
MIN. SUBMERGENCE*	= 42"		=	5	0	BOWL - NI-RI	Δ
Δ CONSULT FACTORY			v18.1			BOWL - S.S.	Δ

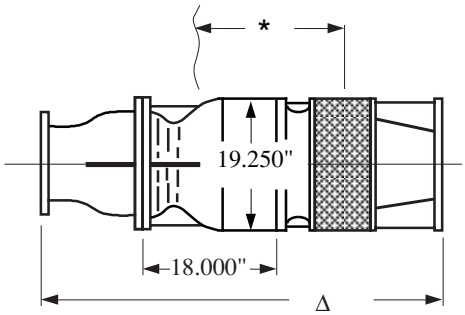

SUBMERSIBLE TURBINE

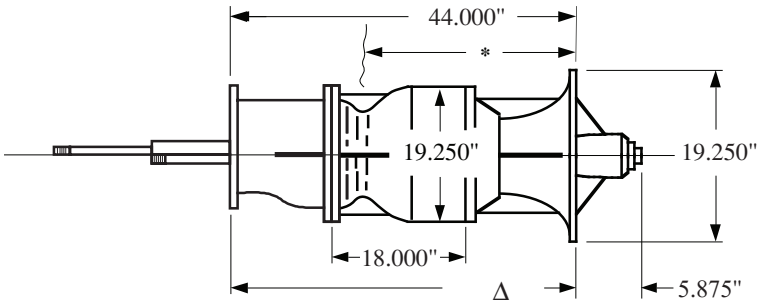

LINESHAFT TURBINE

SIMFLO®

Section 204
Date 9/1/06

SM20H

880 RPM

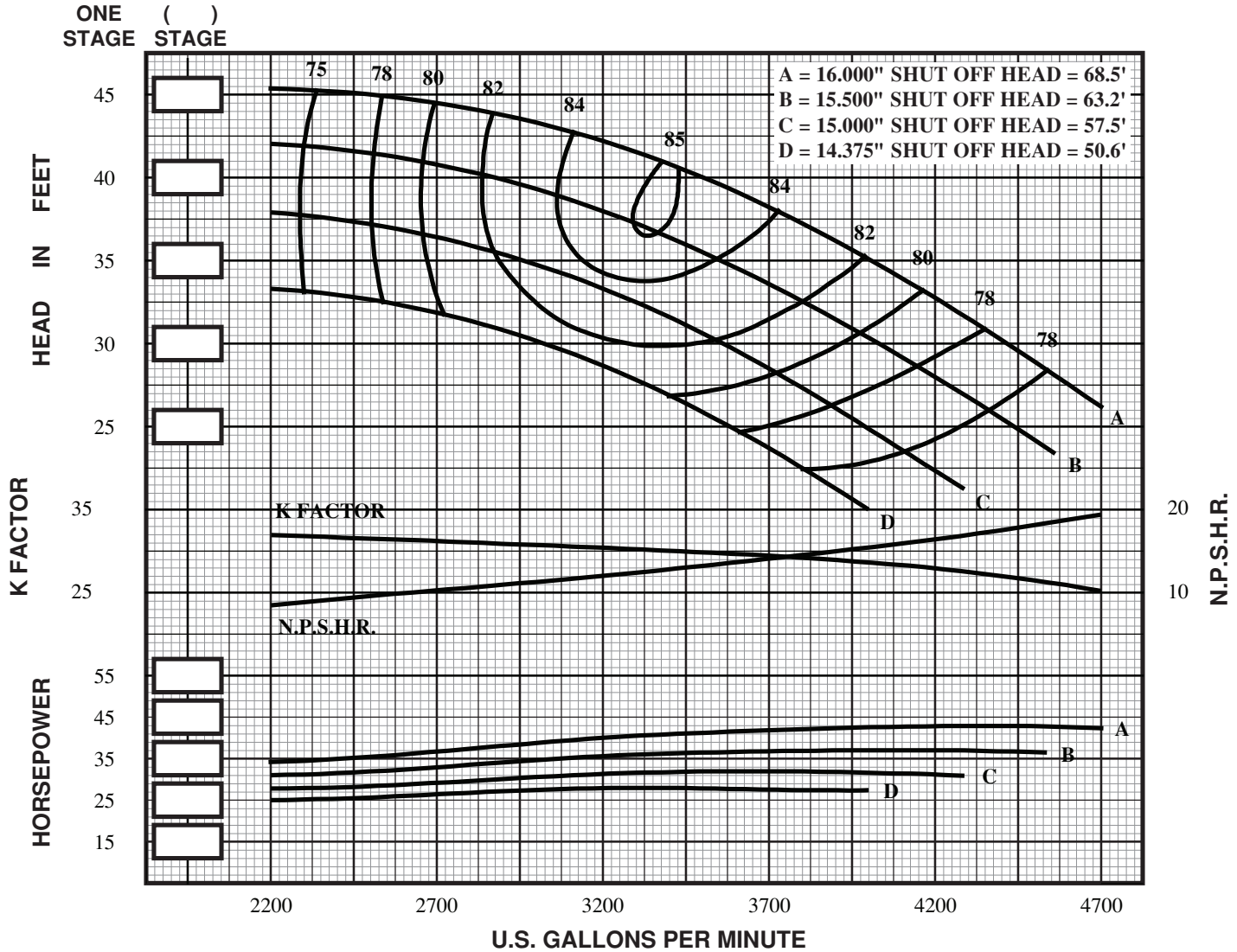

IMPELLER TYPE	= ENCLOSED	STD. SHAFT DIA.	= 2.437"	NO. STAGES	EFF. CHANGE	MATERIAL	B.E.P. EFF. CHANGE
IMPELLER NO.	= SM20H	MAX. SHAFT DIA.	= 2.437"				
IMPELLER WT. - LBS.	= 69.0	STD. LATERAL	= 1.31"	1	0	IMP. - C.I.	Δ
ONE STAGE WT. - LBS.	= 1000.0	DISCHARGE SIZES	= 16"/ Δ	2	0	IMP. - NI-RI	Δ
ADD'L STAGE WT. - LBS.	= 450.0	SUCTION SIZES	= BELL	3	0	IMP. - S.S.	Δ
MAX. SPHERE SIZE	= 1.28"	ONE STAGE WR^2	= 8.210	4	0	BOWL - BRZ.	Δ
MIN. SUBMERGENCE*	= 46"		=	5	0	BOWL - NI-RI	Δ
Δ CONSULT FACTORY			v18.1			BOWL - S.S.	Δ

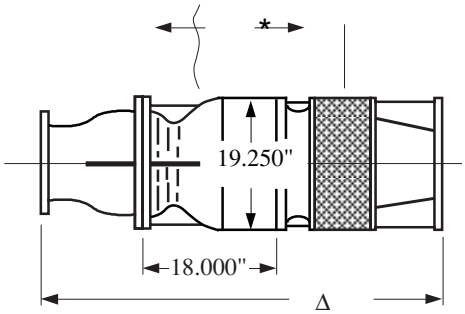

SUBMERSIBLE TURBINE

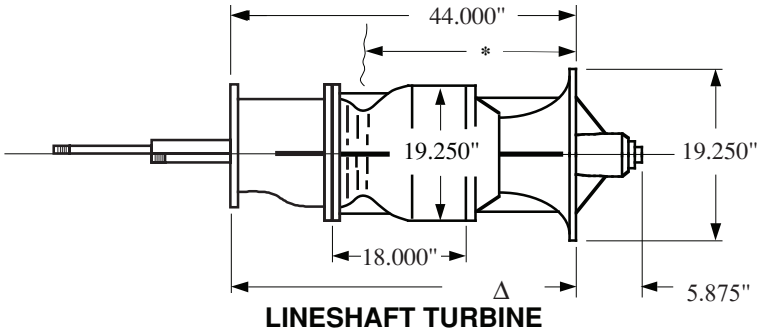

LINESHAFT TURBINE

SIMFLO®

Section 204
Date 9/1/06

SM24M

880 RPM

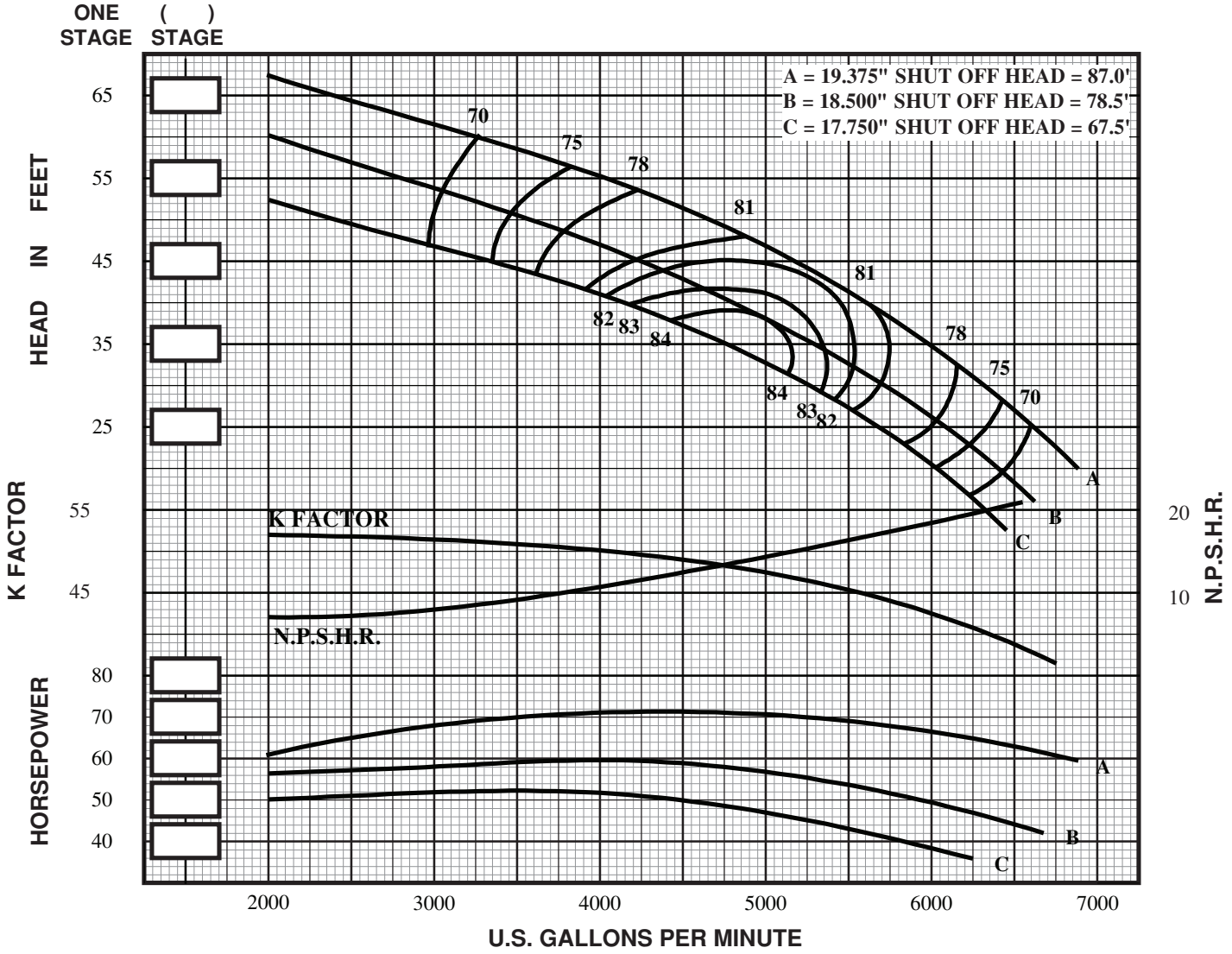

IMPELLER TYPE = ENCLOSED	STD. SHAFT DIA. = 2.937"	NO. STAGES	EFF. CHANGE	MATERIAL	B.E.P. EFF. CHANGE
IMPELLER NO. = SM24M	MAX. SHAFT DIA. = 2.937"				
IMPELLER WT. - LBS. = 112.0	STD. LATERAL = 2.63"	1	0	IMP. - C.I.	Δ
ONE STAGE WT. - LBS. = 1200.0	DISCHARGE SIZES = 18"/ Δ	2	0	IMP. - NI-RI	Δ
ADD'L STAGE WT. - LBS. = 625.0	SUCTION SIZES = BELL	3	0	IMP. - S.S.	Δ
MAX. SPHERE SIZE = 1.81"	ONE STAGE WR^2 = 19.69	4	0	BOWL - BRZ.	Δ
MIN. SUBMERGENCE* = 56"	=	5	0	BOWL - NI-RI	Δ
Δ CONSULT FACTORY	v18.1			BOWL - S.S.	Δ

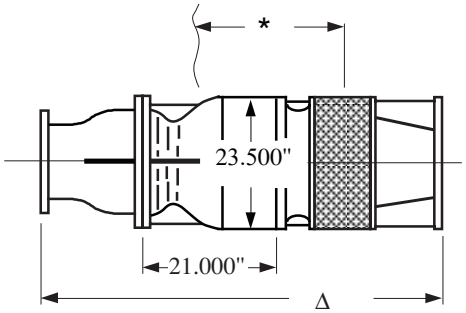

SUBMERSIBLE TURBINE

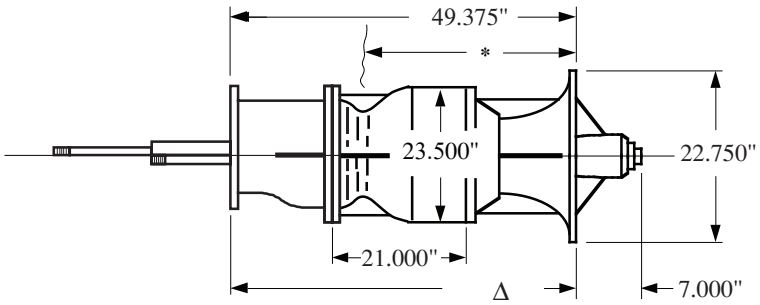

LINESHAFT TURBINE

SIMFLO®

Section 204
Date 9/1/06

SM24H

880 RPM

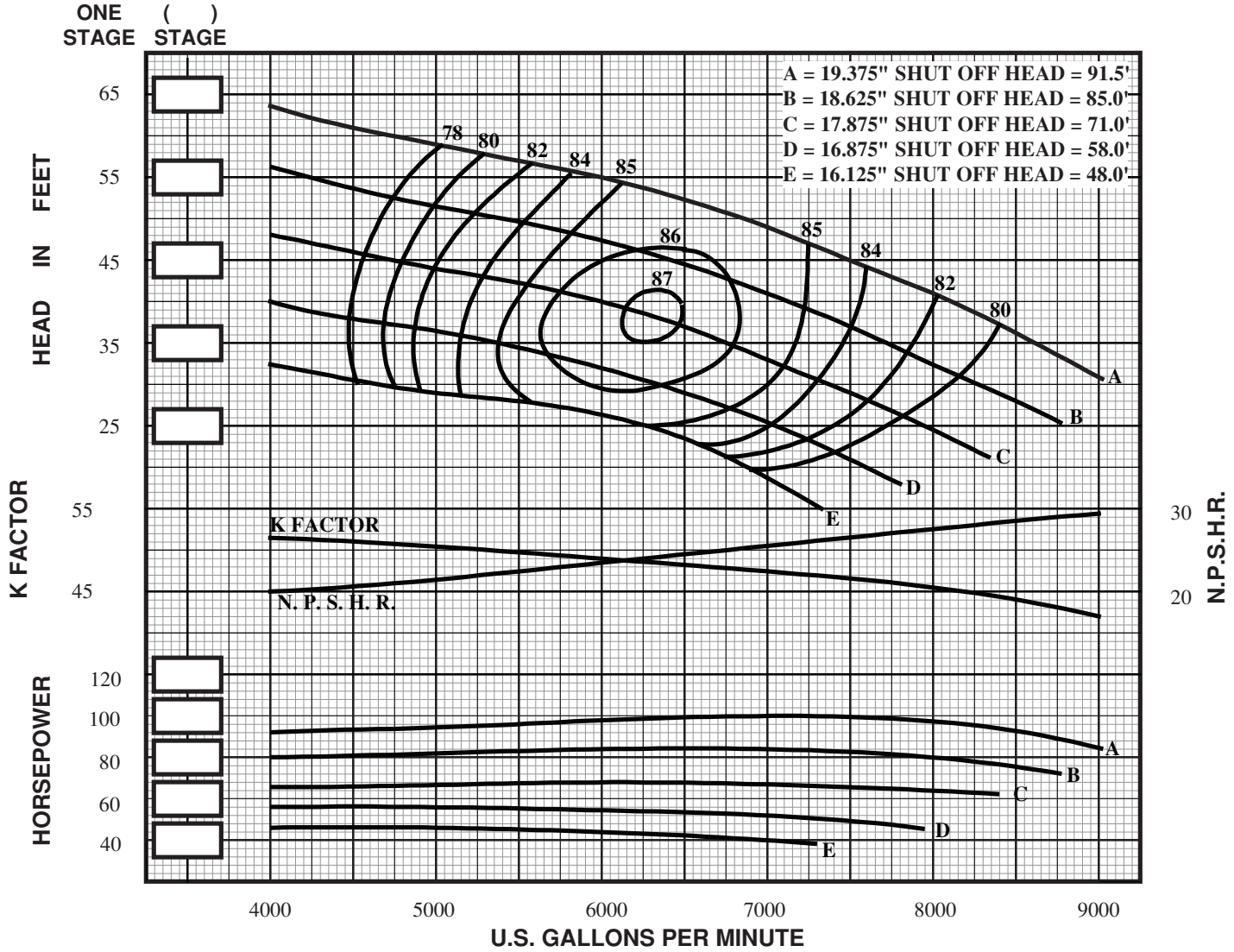

IMPELLER TYPE	= ENCLOSED	STD. SHAFT DIA.	= 2.937"	NO. STAGES	EFF. CHANGE	MATERIAL	B.E.P. EFF. CHANGE
IMPELLER NO.	= SM24H	MAX. SHAFT DIA.	= 2.937"				
IMPELLER WT. - LBS.	= 112.0	STD. LATERAL	= 2.20"	1	0	IMP. - C.I.	Δ
ONE STAGE WT. - LBS.	= 1200.0	DISCHARGE SIZES	= 18"/ Δ	2	0	IMP. - NI-RI	Δ
ADD'L STAGE WT. - LBS.	= 625.0	SUCTION SIZES	= BELL	3	0	IMP. - S.S.	Δ
MAX. SPHERE SIZE	= 1.88"	ONE STAGE WR^2	= 19.03	4	0	BOWL - BRZ.	Δ
MIN. SUBMERGENCE*	= 56"		=	5	0	BOWL - NI-RI	Δ
Δ CONSULT FACTORY			v18.1			BOWL - S.S.	Δ

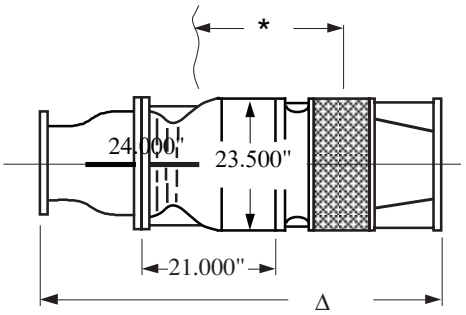

SUBMERSIBLE TURBINE

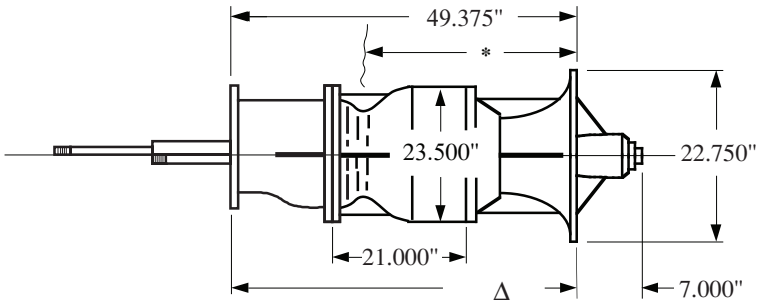

LINESHAFT TURBINE

SIMFLO®

Section 204
Date 9/1/06

SM28H

880 RPM

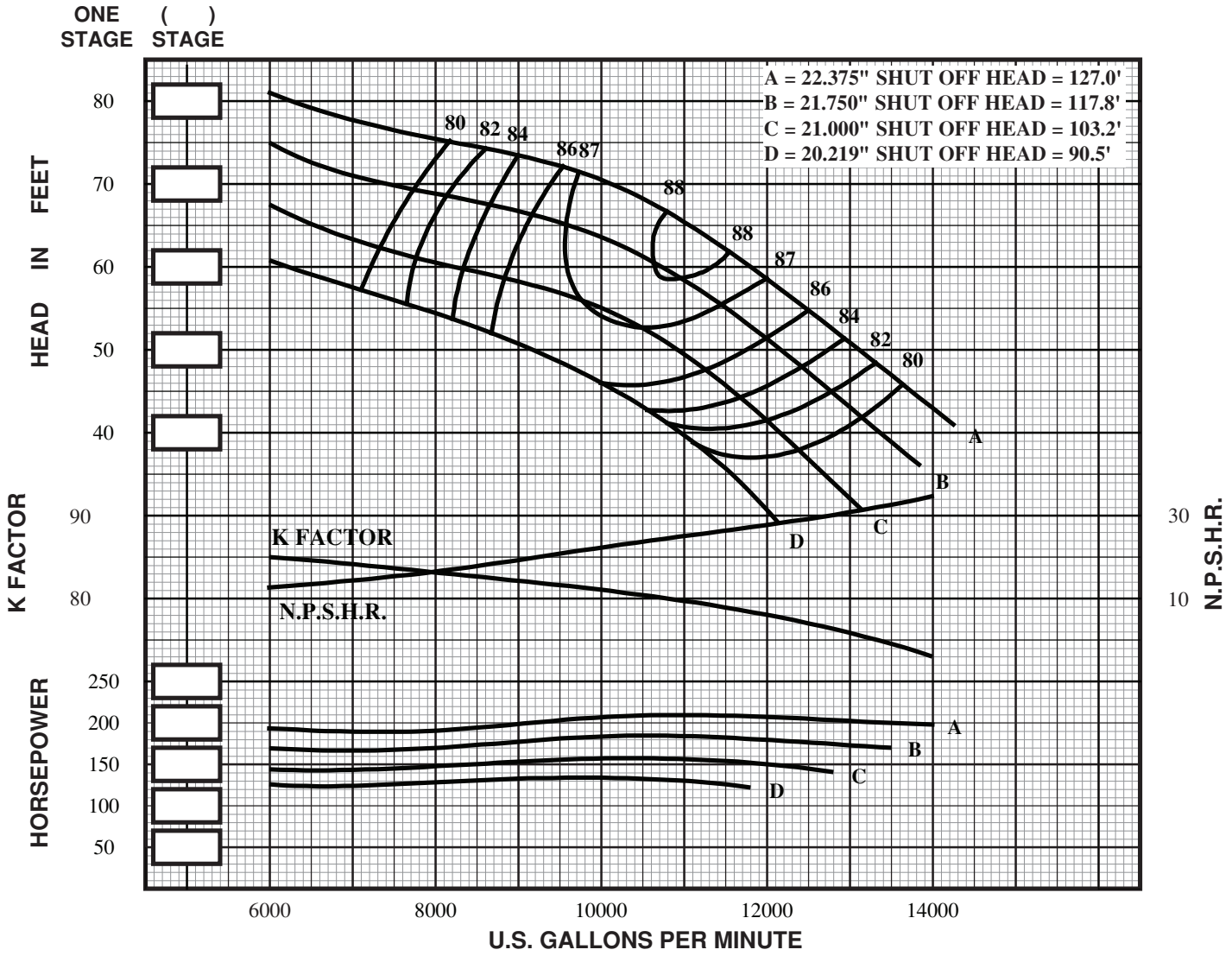

IMPELLER TYPE	= ENCLOSED	STD. SHAFT DIA.	= 2.937"	NO. STAGES	EFF. CHANGE	MATERIAL	B.E.P. EFF. CHANGE
IMPELLER NO.	= SM28H	MAX. SHAFT DIA.	= 2.937"				
IMPELLER WT. - LBS.	= 218.0	STD. LATERAL	= .49"	1	0	IMP. - C.I.	Δ
ONE STAGE WT. - LBS.	= 2100.0	DISCHARGE SIZES	= 20"/ Δ	2	0	IMP. - NI-RI	Δ
ADD'L STAGE WT. - LBS.	= 1000.0	SUCTION SIZES	= BELL	3	0	IMP. - S.S.	Δ
MAX. SPHERE SIZE	= 1.88"	ONE STAGE WR^2	= 39.62	4	0	BOWL - BRZ.	Δ
MIN. SUBMERGENCE*	= 64"		=	5	0	BOWL - NI-RI	Δ
Δ CONSULT FACTORY			v18.1			BOWL - S.S.	Δ

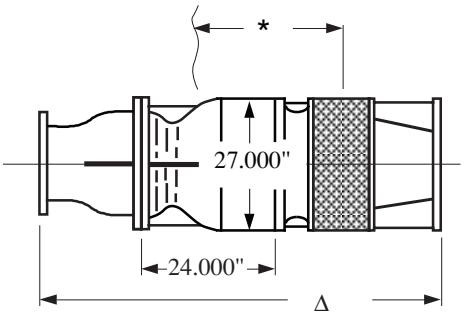

SUBMERSIBLE TURBINE

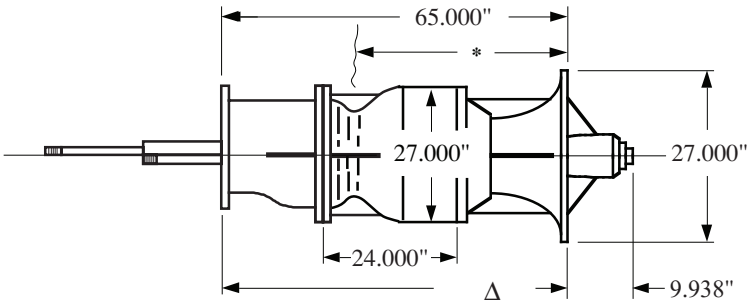

LINESHAFT TURBINE

700 RPM
Selection Chart

Model Number	Bowl Dia. (in.)	Peak Eff. (full dia.)	BEP Flow (gpm)	BEP Head (ft./ stage)	BEP NPSHr (full dia.)	POR (gpm)	Ns	Nss
SM24M	23.50	81.5	4095	28.5	10.6	2867-4914	3632	7625
SM24H	23.50	85.4	5311	31.6	12.3	3718-6373	3828	7767
SM28H	27.00	88.0	8918	40.1	15.8	6243-10700	4148	8341

v18.1

SIMFLO®

Section 205
Date 7/1/99

SM24M

700 RPM

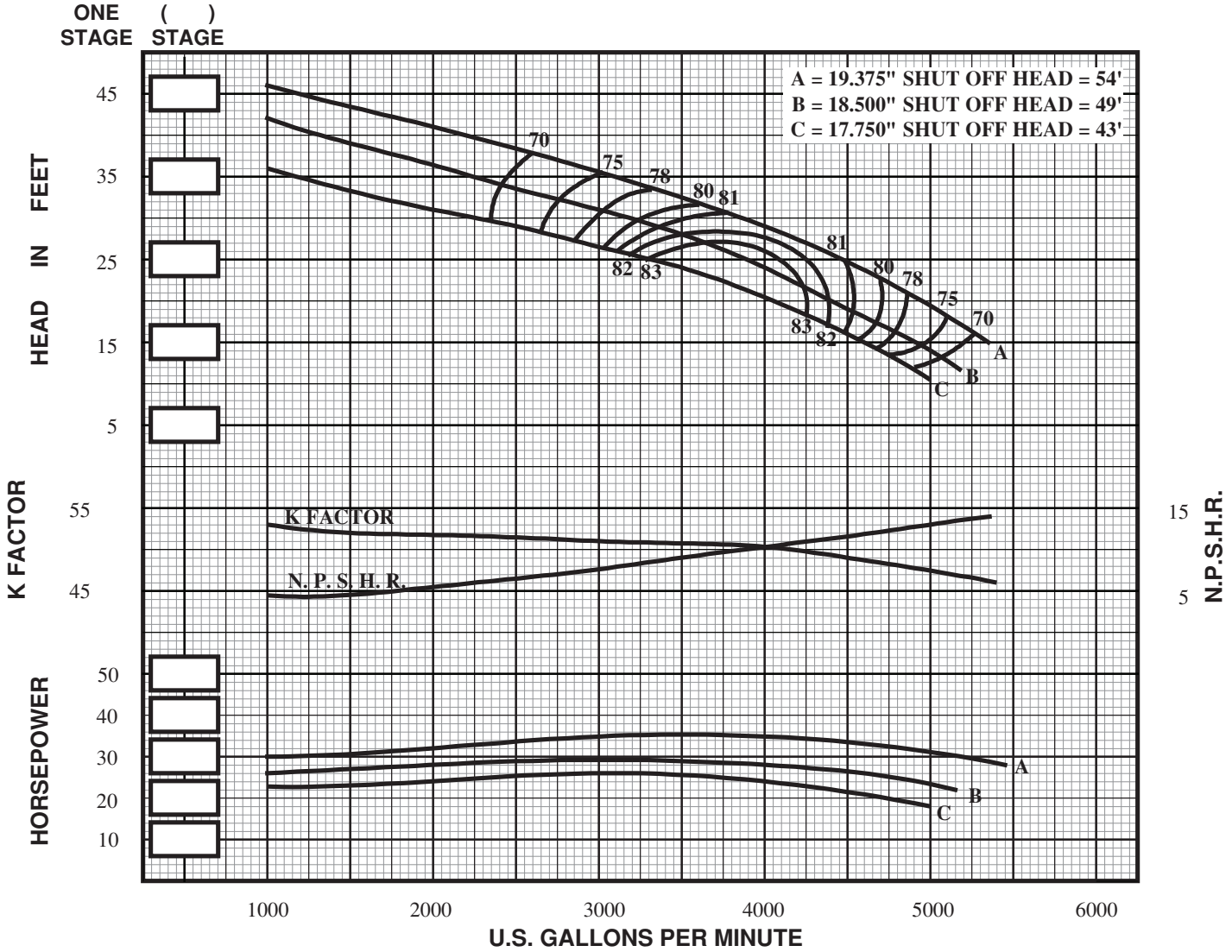

IMPELLER TYPE	= ENCLOSED	STD. SHAFT DIA.	= 2.937"	NO. STAGES	EFF. CHANGE	MATERIAL	B.E.P. EFF. CHANGE
IMPELLER NO.	= SM24M	MAX. SHAFT DIA.	= 2.937"				
IMPELLER WT. - LBS.	= 112.0	STD. LATERAL	= 2.63"	1	0	IMP. - C.I.	Δ
ONE STAGE WT. - LBS.	= 1200.0	DISCHARGE SIZES	= 18"/ Δ	2	0	IMP. - NI-RI	Δ
ADD'L STAGE WT. - LBS.	= 625.0	SUCTION SIZES	= BELL	3	0	IMP. - S.S.	Δ
MAX. SPHERE SIZE	= 1.81"	ONE STAGE WR^2	= 19.69	4	0	BOWL - BRZ.	Δ
MIN. SUBMERGENCE*	= 56"		=	5	0	BOWL - NI-RI	Δ
Δ CONSULT FACTORY			v18.1			BOWL - S.S.	Δ

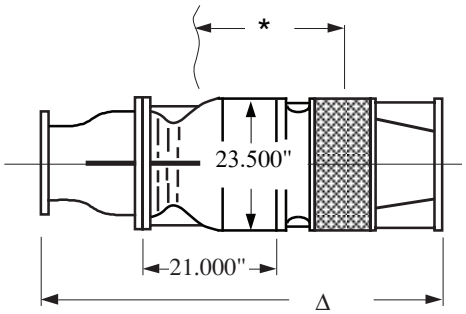

SUBMERSIBLE TURBINE

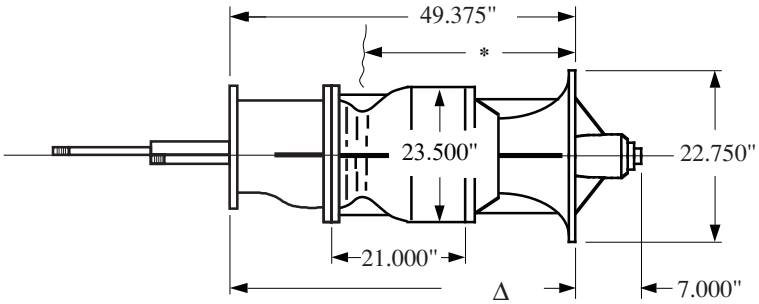

LINESHAFT TURBINE

SIMFLO®

Section 205
Date 7/1/99

SM24H

700 RPM

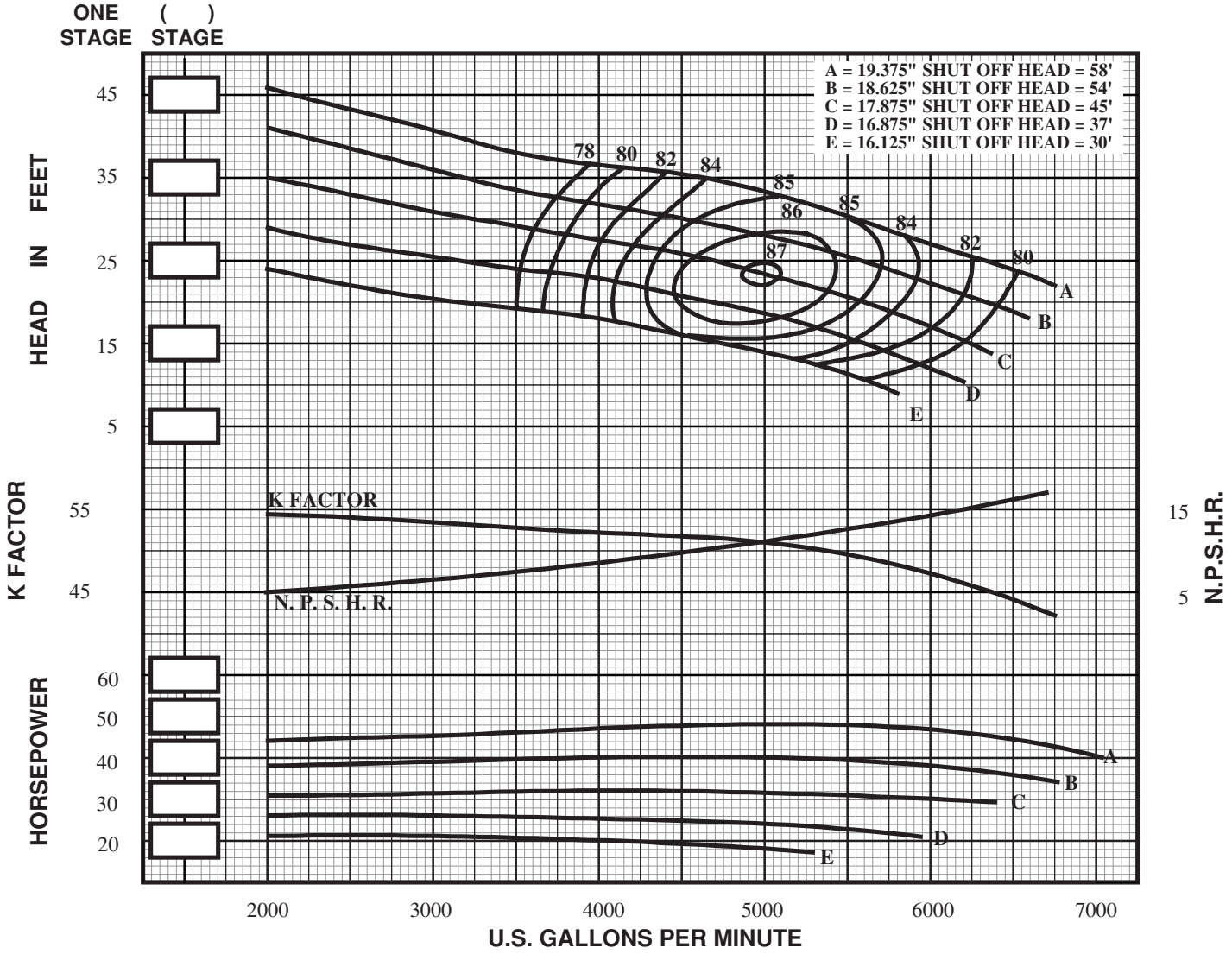

IMPELLER TYPE	= ENCLOSED	STD. SHAFT DIA.	= 2.937"	NO. STAGES	EFF. CHANGE	MATERIAL	B.E.P. EFF. CHANGE
IMPELLER NO.	= SM24H	MAX. SHAFT DIA.	= 2.937"				
IMPELLER WT. - LBS.	= 112.0	STD. LATERAL	= 2.20"	1	0	IMP. - C.I.	Δ
ONE STAGE WT. - LBS.	= 1200.0	DISCHARGE SIZES	= 18"/ Δ	2	0	IMP. - NI-RI	Δ
ADD'L STAGE WT. - LBS.	= 625.0	SUCTION SIZES	= BELL	3	0	IMP. - S.S.	Δ
MAX. SPHERE SIZE	= 1.88"	ONE STAGE WR^2	= 19.03	4	0	BOWL - BRZ.	Δ
MIN. SUBMERGENCE*	= 56"		=	5	0	BOWL - NI-RI	Δ
Δ CONSULT FACTORY			v18.1			BOWL - S.S.	Δ

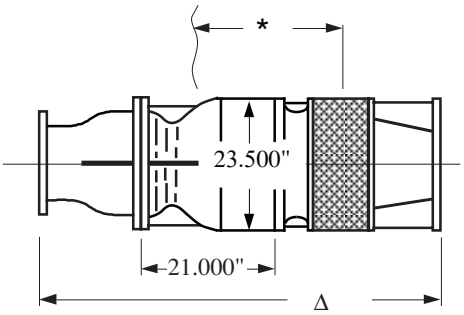

SUBMERSIBLE TURBINE

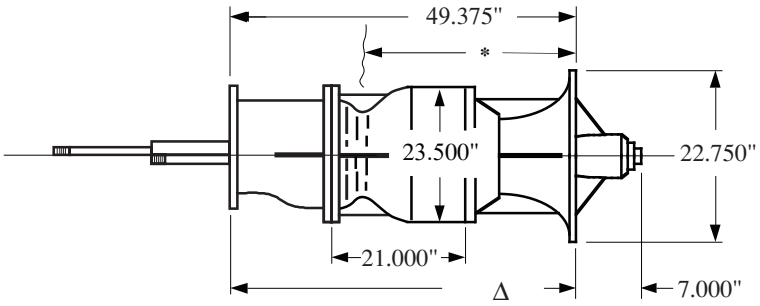

LINESHAFT TURBINE

SIMFLO®

Section 205
Date 7/1/99

SM28H

700 RPM

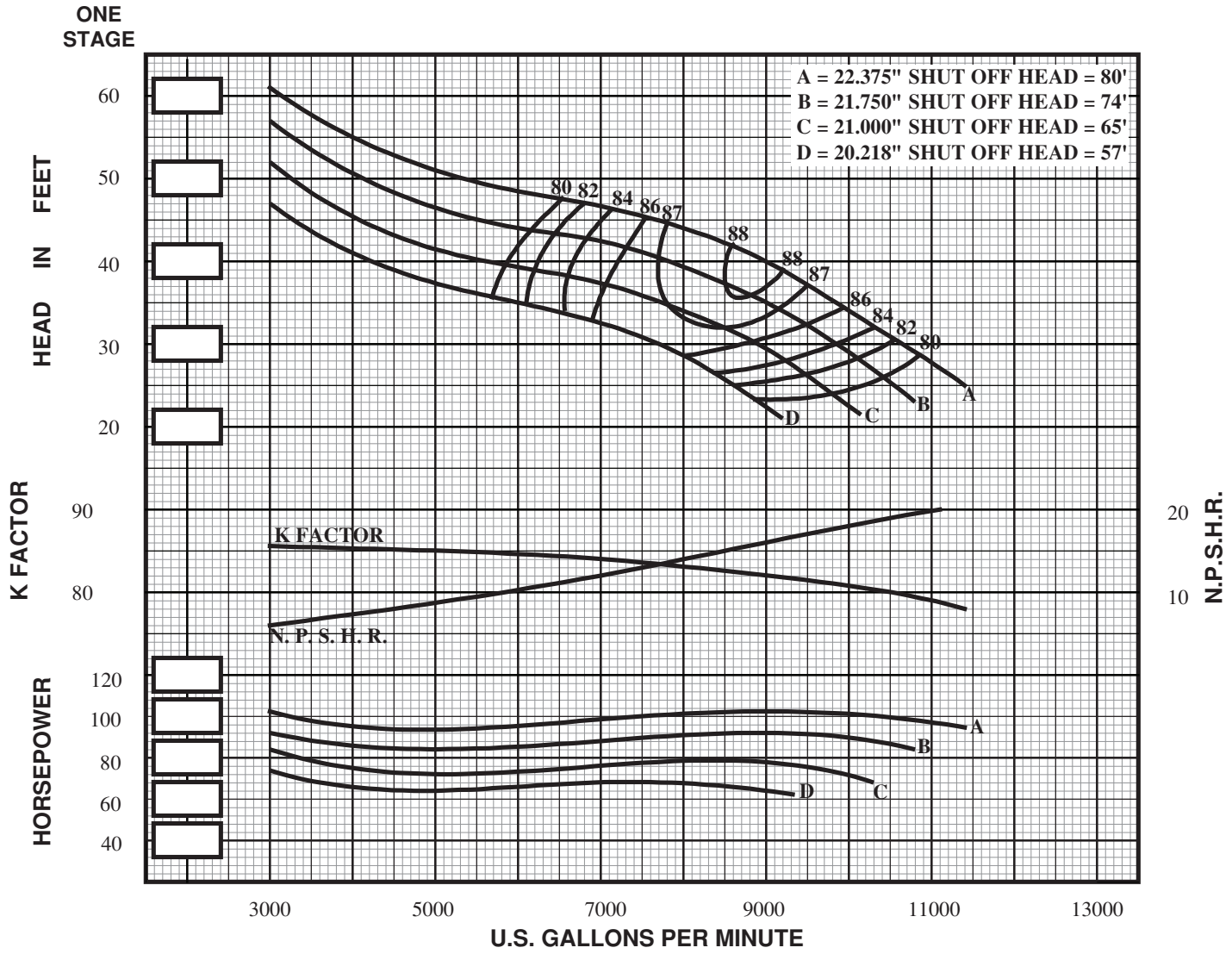

IMPELLER TYPE = ENCLOSED		STD. SHAFT DIA. = 2.937"	NO. STAGES	EFF. CHANGE	MATERIAL	B.E.P. EFF. CHANGE
IMPELLER NO. = SM28H		MAX. SHAFT DIA. = 2.937"				
IMPELLER WT. - LBS. = 218.0		STD. LATERAL = .49"	1	0	IMP. - C.I.	Δ
ONE STAGE WT. - LBS. = 2100.0		DISCHARGE SIZES = 20"/ Δ	2	0	IMP. - NI-RI	Δ
ADD'L STAGE WT. - LBS. = 1000.0		SUCTION SIZES = BELL	3	0	IMP. - S.S.	Δ
MAX. SPHERE SIZE = 1.88"		ONE STAGE WR^2 = 39.62	4	0	BOWL - BRZ.	Δ
MIN. SUBMERGENCE* = 64"		=	5	0	BOWL - NI-RI	Δ
Δ CONSULT FACTORY		v18.1			BOWL - S.S.	Δ

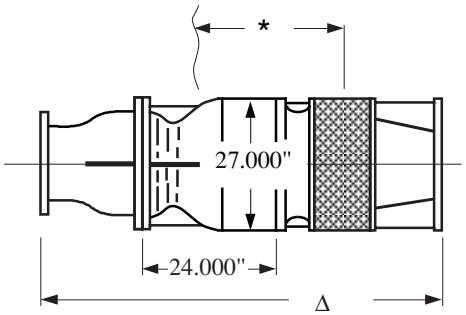

SUBMERSIBLE TURBINE

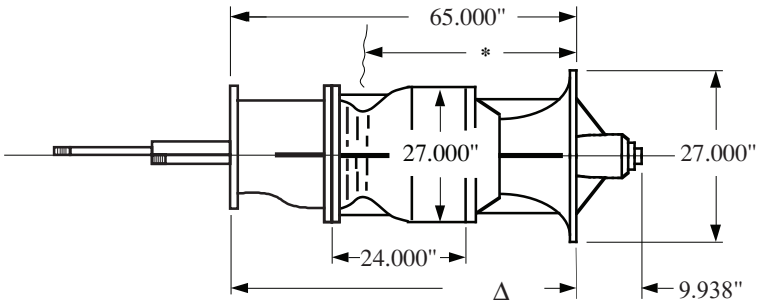

LINESHAFT TURBINE