1770 RPM
Selection Chart

Model Number	Bowl Dia. (in.)	Peak Efficiency (full dia.)	BEP Flow (gpm)	BEP Head (ft. / stage)	BEP NPSHr (full dia.)	POR (gpm)	Ns	Nss
SP5XL	5.25	78.0	52.4	13.7	2.07	37-63	1799	7424
SP5L	5.25	76.0	66.7	15.5	2.16	47-80	1850	8113
SM5M	5.25	78.0	101	7.86	3.42	71-121	3789	7073
SM5H	5.25	78.0	141	9.60	4.54	99-169	3854	6758
SP5LO	5.25	76.5	48.8	12.8	2.22	34-59	1827	6799
SP6LL	6.00	73.0	65.0	13.4	4.28	46-78	2038	4796
SP6L	6.00	74.0	71.1	17.3	2.87	50-85	1759	6769
SP6M	6.00	74.0	83.5	17.8	3.99	58-100	1866	5729
SP6H	6.00	78.0	120	20.3	15.4	84-144	2027	2494
SP7L	7.19	80.0	206	24.9	3.79	144-247	2279	9352
SP7H	7.19	82.0	273	28.5	5.86	191-328	2371	7765
SK7L	6.56	78.0	204	17.8	7.71	143-245	2917	5464
SK7M	6.56	78.0	230	16.2	2.46	161-276	3324	13666
SK7H	6.56	78.0	287	18.5	2.75	201-344	3362	14042
SM7M	7.38	78.0	287	16.8	4.35	201-344	3614	9955
SP8L	7.88	76.0	142	28.9	9.72	99-170	1692	3831
SP8M	7.88	78.0	162	29.9	3.41	113-194	1762	8978
SP8H	7.88	78.0	202	32.0	6.28	141-242	1870	6341
SM8H	7.69	80.0	290	28.8	10.3	203-348	2425	5243
SR8MO	7.69	76.5	248	26.2	6.54	174-298	2407	6816
SR8HO	7.69	78.0	299	25.7	7.01	209-359	2681	7104
SK8H	7.50	78.0	579	22.1	18.9	405-695	4178	4699
SP9L	9.50	86.0	280	54.5	4.72	196-336	1477	9249
SP9M	9.50	85.0	312	60.4	5.94	218-374	1443	8217
SM9L	9.50	84.0	299	49.6	5.69	209-359	1638	8308
SM9M	9.50	86.0	338	55.2	7.37	237-406	1607	7275
SL9H	9.00	78.5	529	43.6	11.6	370-635	2399	6477
SF9H	9.50	81.0	611	52.5	17.3	428-733	2243	5158
SK9M	9.44	80.0	904	36.4	11.1	633-1085	3591	8751
SK9H	9.44	77.5	1094	37.5	16.5	766-1313	3863	7151
SP10L	10.19	76.0	353	41.7	18.1	247-424	2027	3790
SP10M	10.19	80.0	401	47.8	9.05	281-481	1950	6793
SP10H	10.19	83.0	499	54.3	9.03	349-599	1977	7590
SM10MO	10.19	80.5	620	51.7	10.5	434-744	2286	7556
SM10HO	10.19	78.0	670	53.2	11.6	469-804	2326	7289
SM10M	10.19	84.5	673	48.6	11.0	471-808	2495	7602
SM10H	10.19	82.0	809	50.4	13.2	566-971	2661	7270

1770 RPM
Selection Chart

Model Number	Bowl Dia. (in.)	Peak Efficiency (full dia.)	BEP Flow (gpm)	BEP Head (ft. / stage)	BEP NPSHr (full dia.)	POR (gpm)	Ns	Nss
SM11M	10.63	81.5	661	55.5	12.2	463-793	2238	6971
SM11H	10.63	82.0	798	60.5	19.2	559-958	2305	5451
SL11H	10.88	82.0	1012	64.9	7.30	708-1214	2463	12679
SR11MO	11.50	81.0	993	64.5	18.8	695-1192	2451	6178
SR11HO	11.50	83.0	1201	74.5	19.5	841-1441	2428	6635
SP11L	11.25	84.5	1129	54.4	11.8	790-1355	2969	9341
SP11M	11.25	85.0	1193	58.2	10.2	835-1432	2901	10711
SP11H	11.25	83.7	1580	58.0	17.9	1106-1896	3348	8085
SW12L	11.63	85.0	486	72.1	8.28	340-583	1577	7994
SW12M	11.63	86.0	596	84.1	9.43	417-715	1556	8030
SP12M	11.88	82.0	750	88.7	11.2	525-900	1677	7918
SP12H	11.88	81.0	801	92.7	12.0	561-961	1677	7770
SL12M	11.75	86.0	885	61.8	10.2	620-1062	2389	9226
SL12H	11.75	86.0	984	79.4	9.11	689-1181	2087	10588
SJ12M	12.00	85.0	1196	69.7	16.7	837-1435	2538	7410
SJ12H	12.00	82.0	1391	80.6	21.6	974-1669	2454	6589
SM14LL	14.00	81.5	1798	74.2	15.7	1259-2158	2969	9516
SM14L	14.00	83.4	2108	64.8	18.5	1476-2530	3558	9110
SM14M	14.00	84.5	2255	83.0	19.2	1579-2706	3057	9164
SM14H	14.00	85.0	2648	87.8	23.6	1854-3178	3175	8506
SM14HH	14.00	83.5	2970	90.2	24.2	2079-3564	3296	8841
SM16MO	15.25	86.0	3708	96.5	22.9	2596-4450	3501	10296
SM16HO	15.25	86.0	4351	103	28.5	3046-5221	3611	9465
SM16M	15.25	85.0	4020	95.0	22.9	2814-4824	3688	10720
SM16H	15.25	85.0	4548	109	28.6	3184-5458	3538	9652
SM20M	19.25	85.0	6195	158	47.1	4337-7434	3126	7749
SM20H	19.25	85.0	6859	167	63.3	4801-8231	3155	6532

SIMFLO®

Section 202
Date 9/1/06

SP5XL

1770 RPM

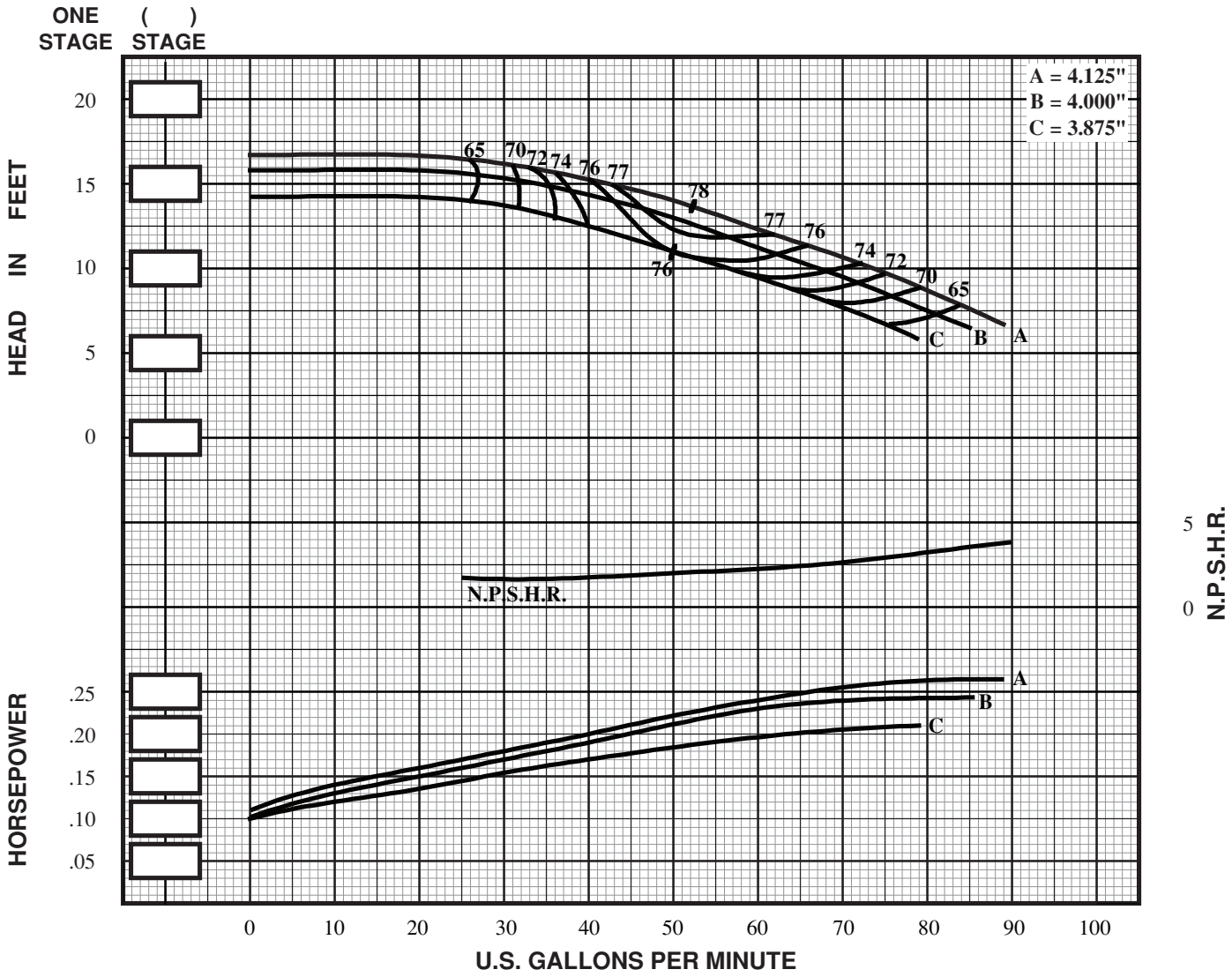

IMPELLER TYPE	= ENCLOSED	STD. SHAFT DIA.	= .875"	NO. STAGES	EFF. CHANGE	MATERIAL	B.E.P. EFF. CHANGE
IMPELLER NO.	= SP5XL	MAX. SHAFT DIA.	= .875"				
IMPELLER WT. - LBS.	= 1.70	STD. LATERAL	= .30"	1	-4	IMP. - C.I.	Δ
ONE STAGE WT. - LBS.	= 50.0	DISCHARGE SIZES	= 3"/ 4"	2	-3	IMP. - NI-RI	Δ
ADD'L STAGE WT. - LBS.	= 14.0	SUCTION SIZES	= 4"/ BELL	3	-2	IMP. - S.S.	Δ
MAX. SPHERE SIZE	= .38"	ONE STAGE WR^2	= .015	4	-1	BOWL - BRZ.	Δ
MIN. SUBMERGENCE	= 10"	K FACTOR (max)	= 2.30	5	0	BOWL - NI-RI	Δ
Δ CONSULT FACTORY			v18.1			BOWL - S.S.	Δ

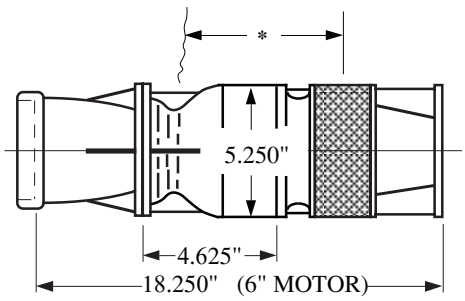

SUBMERSIBLE TURBINE

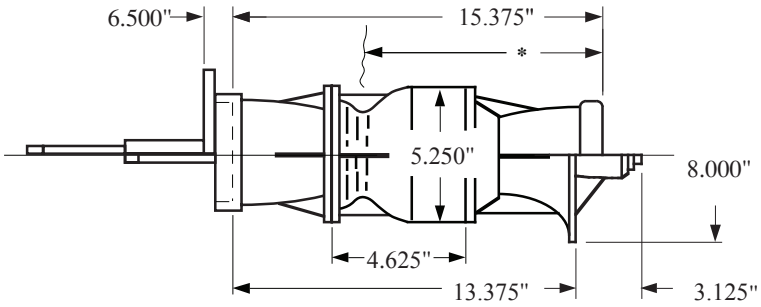

LINESHAFT TURBINE

SIMFLO®

Section 202
Date 9/1/06

SP5L

1770 RPM

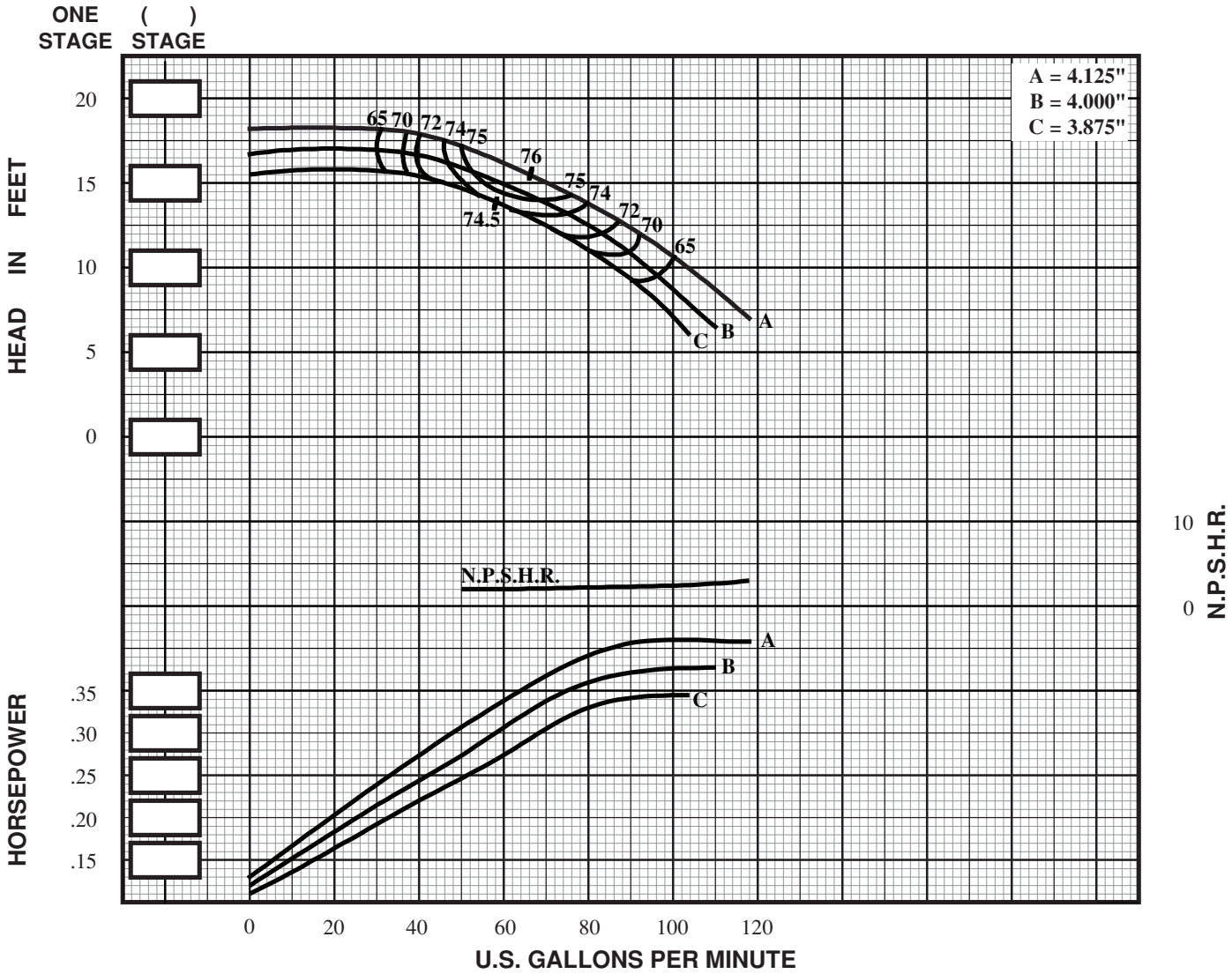

IMPELLER TYPE	= ENCLOSED	STD. SHAFT DIA.	= .875"	NO. STAGES	EFF. CHANGE	MATERIAL	B.E.P. EFF. CHANGE
IMPELLER NO.	= SP5L	MAX. SHAFT DIA.	= .875"				
IMPELLER WT. - LBS.	= 1.75	STD. LATERAL	= .30"	1	-4	IMP. - C.I.	Δ
ONE STAGE WT. - LBS.	= 50.0	DISCHARGE SIZES	= 3"/ 4"	2	-3	IMP. - NI-RI	Δ
ADD'L STAGE WT. - LBS.	= 14.0	SUCTION SIZES	= 4"/ BELL	3	-2	IMP. - S.S.	Δ
MAX. SPHERE SIZE	= .38"	ONE STAGE WR^2	= .015	4	-1	BOWL - BRZ.	Δ
MIN. SUBMERGENCE	= 10"	K FACTOR (max)	= 2.40	5	0	BOWL - NI-RI	Δ
Δ CONSULT FACTORY			v18.1			BOWL - S.S.	Δ

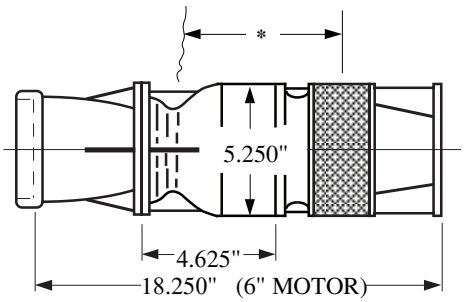

SUBMERSIBLE TURBINE

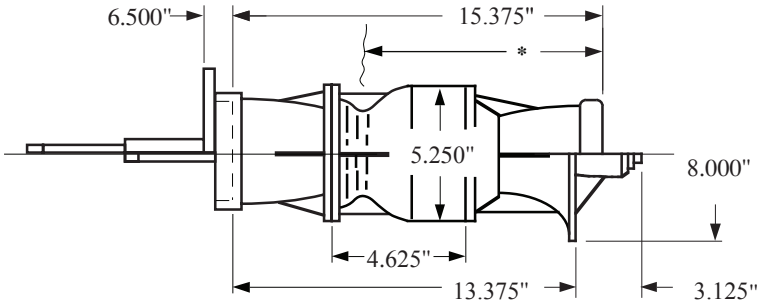

LINESHAFT TURBINE

SIMFLO®

Section 202
Date 9/1/06

SM5M

1770 RPM

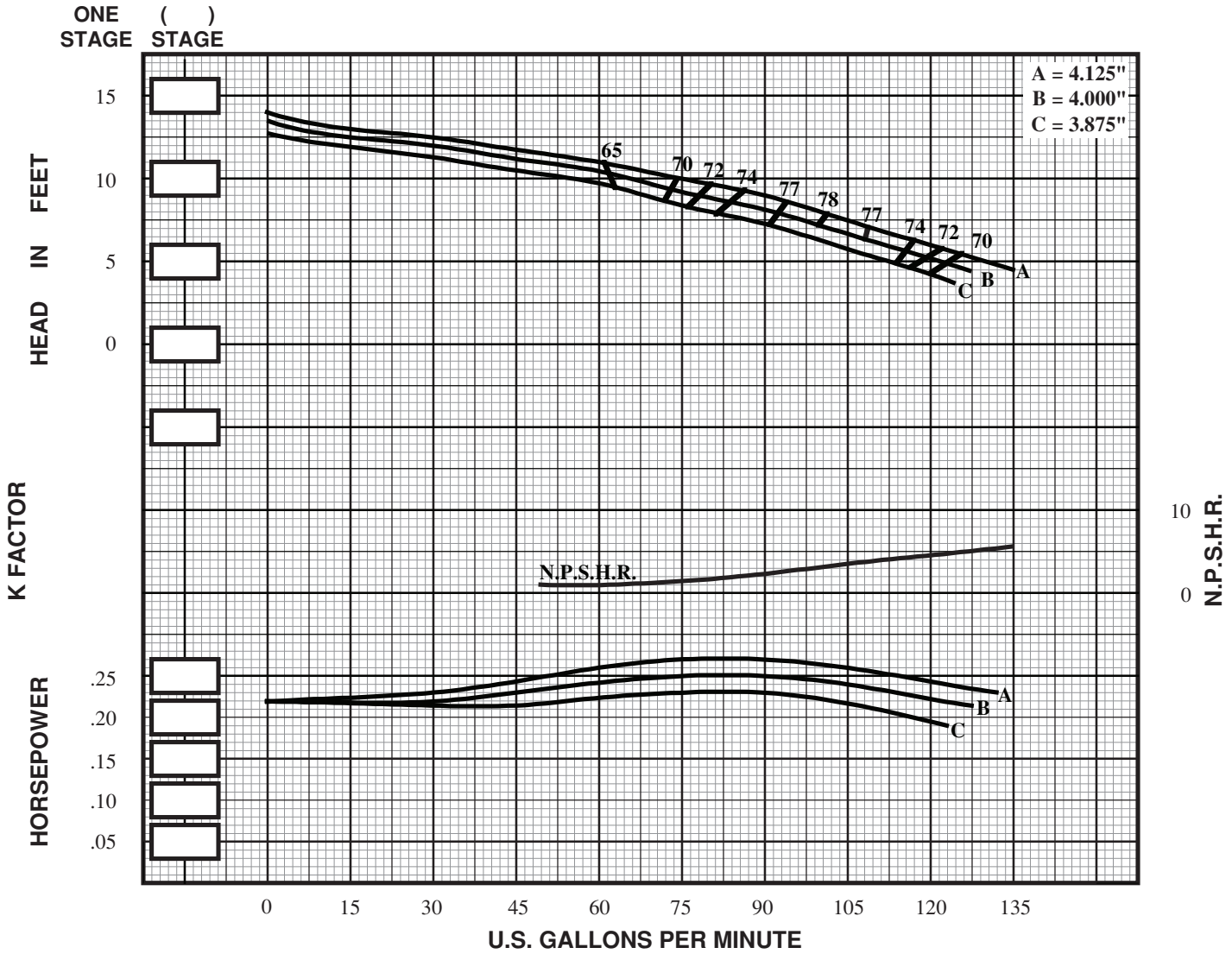

IMPELLER TYPE	= ENCLOSED	STD. SHAFT DIA.	= .875"	NO. STAGES	EFF. CHANGE	MATERIAL	B.E.P. EFF. CHANGE
IMPELLER NO.	= SM5M	MAX. SHAFT DIA.	= .875"				
IMPELLER WT. - LBS.	= 1.85	STD. LATERAL	= .55"	1	-4	IMP. - C.I.	Δ
ONE STAGE WT. - LBS.	= 50.0	DISCHARGE SIZES	= 3"/ 4"	2	-3	IMP. - NI-RI	Δ
ADD'L STAGE WT. - LBS.	= 14.0	SUCTION SIZES	= 4"/ BELL	3	-2	IMP. - S.S.	Δ
MAX. SPHERE SIZE	= .63"	ONE STAGE WR^2	= .015	4	-1	BOWL - BRZ.	Δ
MIN. SUBMERGENCE	= 10"	K FACTOR (max)	= 2.50	5	0	BOWL - NI-RI	Δ
Δ CONSULT FACTORY			v18.1			BOWL - S.S.	Δ

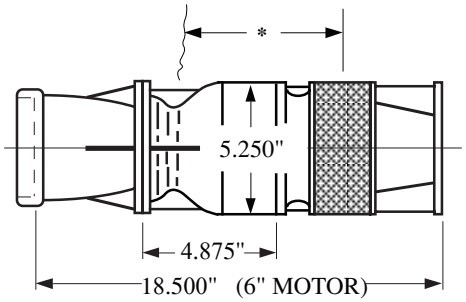

SUBMERSIBLE TURBINE

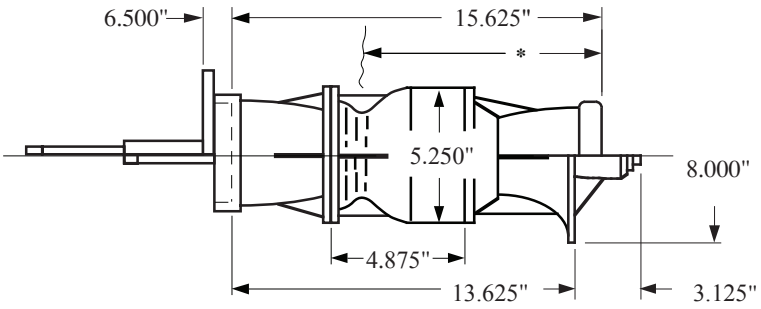

LINESHAFT TURBINE

SIMFLO®

Section 202
Date 9/1/06

SM5H

1770 RPM

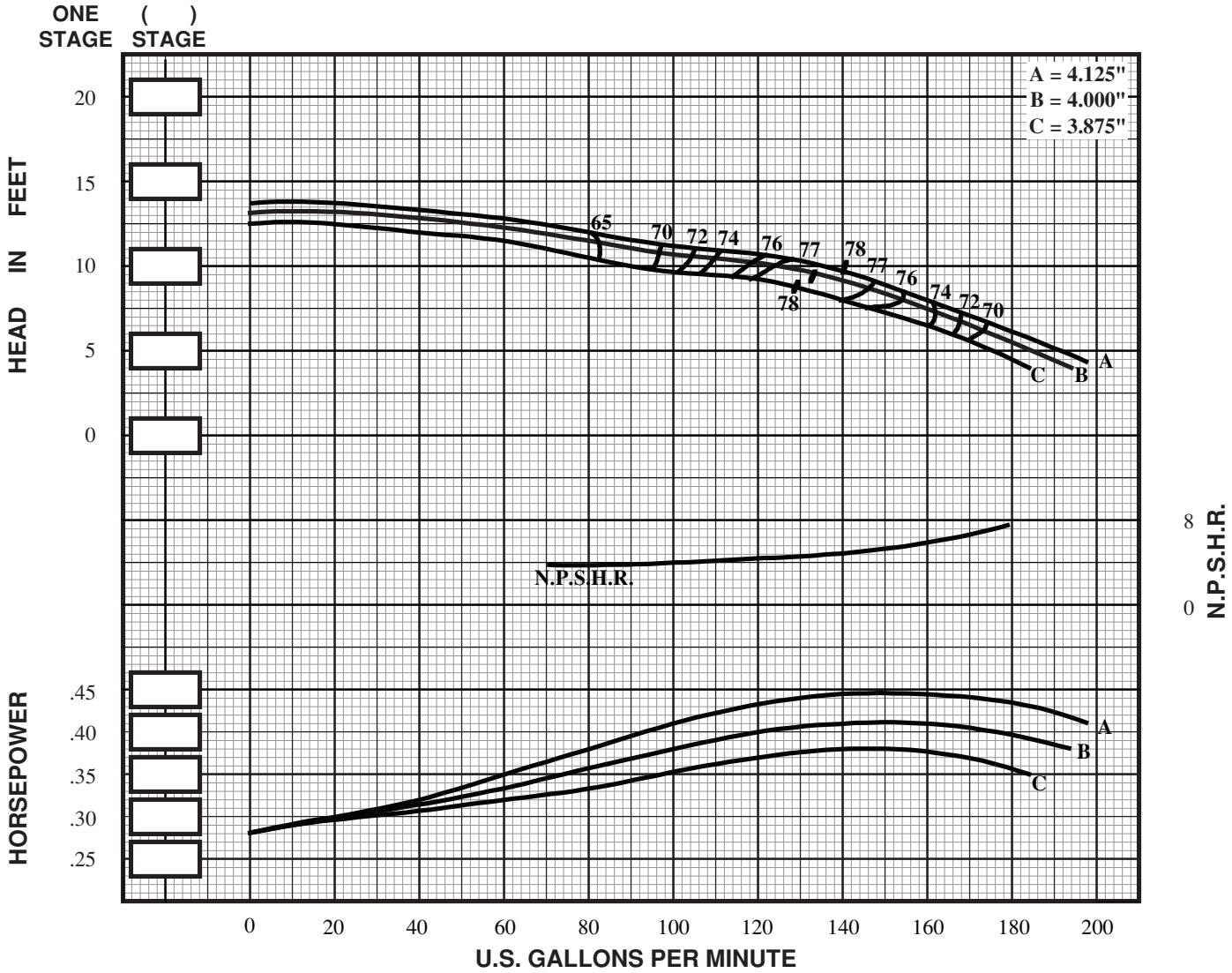

IMPELLER TYPE	= ENCLOSED	STD. SHAFT DIA.	= .875"	NO. STAGES	EFF. CHANGE	MATERIAL	B.E.P. EFF. CHANGE
IMPELLER NO.	= SM5H	MAX. SHAFT DIA.	= .875"				
IMPELLER WT. - LBS.	= 1.95	STD. LATERAL	= .55"	1	-4	IMP. - C.I.	Δ
ONE STAGE WT. - LBS.	= 50.0	DISCHARGE SIZES	= 3"/ 4"	2	-3	IMP. - NI-RI	Δ
ADD'L STAGE WT. - LBS.	= 14.0	SUCTION SIZES	= 4"/ BELL	3	-2	IMP. - S.S.	Δ
MAX. SPHERE SIZE	= .50"	ONE STAGE WR^2	= .015	4	-1	BOWL - BRZ.	Δ
MIN. SUBMERGENCE	= 10"	K FACTOR (max)	= 2.50	5	0	BOWL - NI-RI	Δ
Δ CONSULT FACTORY			v18.1			BOWL - S.S.	Δ

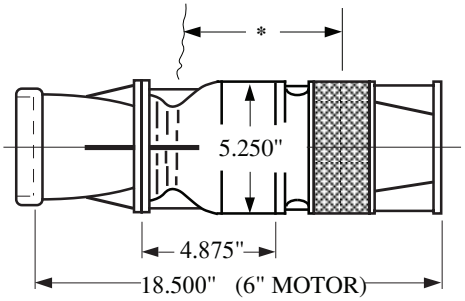

SUBMERSIBLE TURBINE

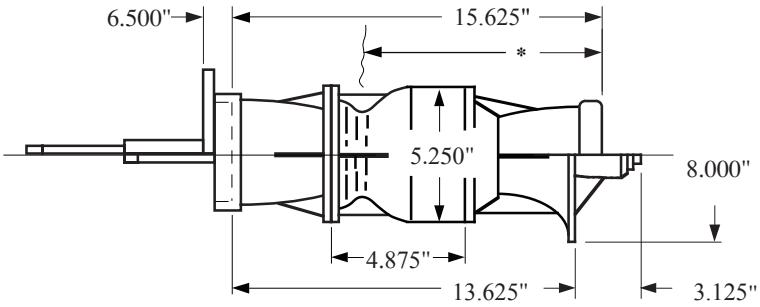

LINESHAFT TURBINE

SIMFLO®

Section 202
Date 9/1/06

SP5LO

1770 RPM

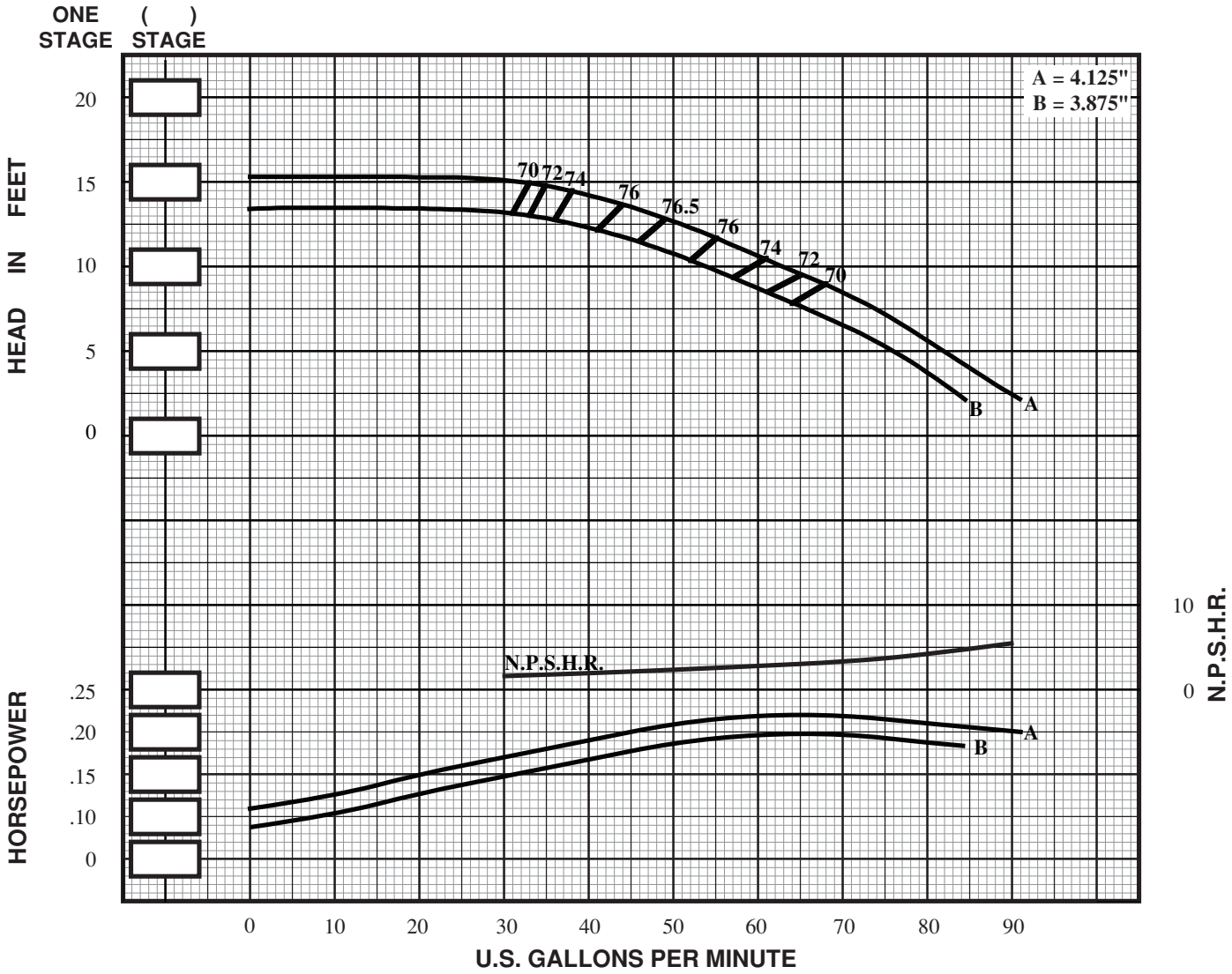

IMPELLER TYPE	= SEMI-OPEN	STD. SHAFT DIA.	= .875"	NO. STAGES	EFF. CHANGE	MATERIAL	B.E.P. EFF. CHANGE
IMPELLER NO.	= SP5LO	MAX. SHAFT DIA.	= .875"				
IMPELLER WT. - LBS.	= 1.40	STD. LATERAL	= .16"	1	-6	IMP. - C.I.	Δ
ONE STAGE WT. - LBS.	= 50.0	DISCHARGE SIZES	= 3" / 4"	2	-4	IMP. - NI-RI	Δ
ADD'L STAGE WT. - LBS.	= 14.0	SUCTION SIZES	= 4"/ BELL	3	-3	IMP. - S.S.	Δ
MAX. SPHERE SIZE	= .31"	ONE STAGE WR^2	= .014	4	-1.5	BOWL - BRZ.	Δ
MIN. SUBMERGENCE	= 10"	K FACTOR (max)	= 4.70	5	0	BOWL - NI-RI	Δ
						BOWL - S.S.	Δ

Δ CONSULT FACTORY v18.1

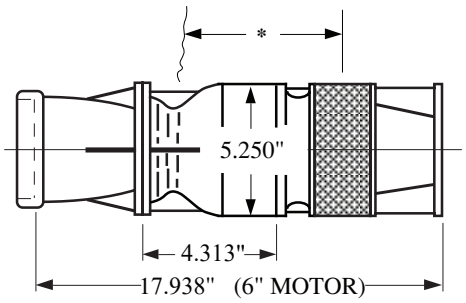

SUBMERSIBLE TURBINE

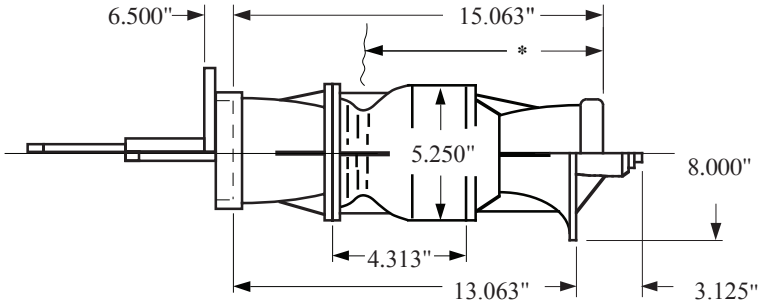

LINESHAFT TURBINE

SIMFLO®

Section 202
Date 3/30/18

SP6LL

1770 RPM

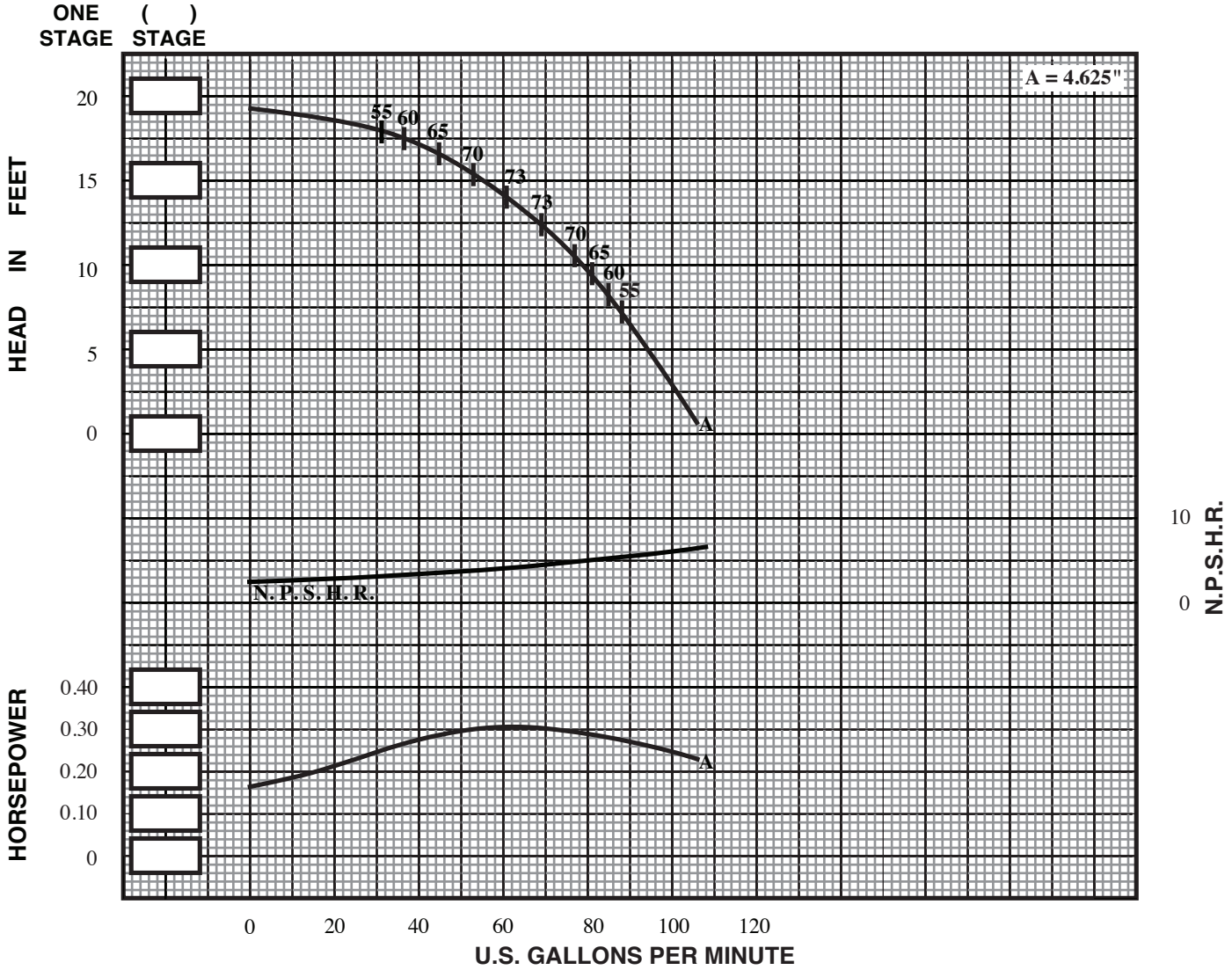

IMPELLER TYPE	= ENCLOSED	STD. SHAFT DIA.	= 1.000"	NO. STAGES	EFF. CHANGE	MATERIAL	B.E.P. EFF. CHANGE
IMPELLER NO.	= SP6LL	MAX. SHAFT DIA.	= 1.000"				
IMPELLER WT. - LBS.	= 2.60	STD. LATERAL	= .66"	1	-5	IMP. - C.I.	Δ
ONE STAGE WT. - LBS.	= 55.0	DISCHARGE SIZES	= 3" / 4"	2	-4	IMP. - NI-RI	Δ
ADD'L STAGE WT. - LBS.	= 18.5	SUCTION SIZES	= 4" / BELL	3	-3	IMP. - S.S.	Δ
MAX. SPHERE SIZE	= .38"	ONE STAGE WR^2	= .037	4	-1	BOWL - BRZ.	Δ
MIN. SUBMERGENCE*	= 11"	K-FACTOR, MAX	= 2.70	5	0	BOWL - NI-RI	Δ
Δ CONSULT FACTORY			v18.2			BOWL - S.S.	Δ

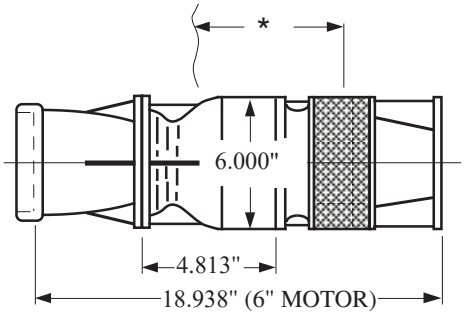

SUBMERSIBLE TURBINE

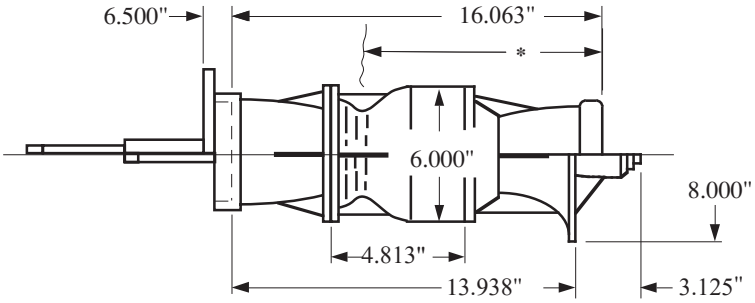

LINESHAFT TURBINE

SIMFLO®

Section 202
Date 9/1/06

SP6L

1770 RPM

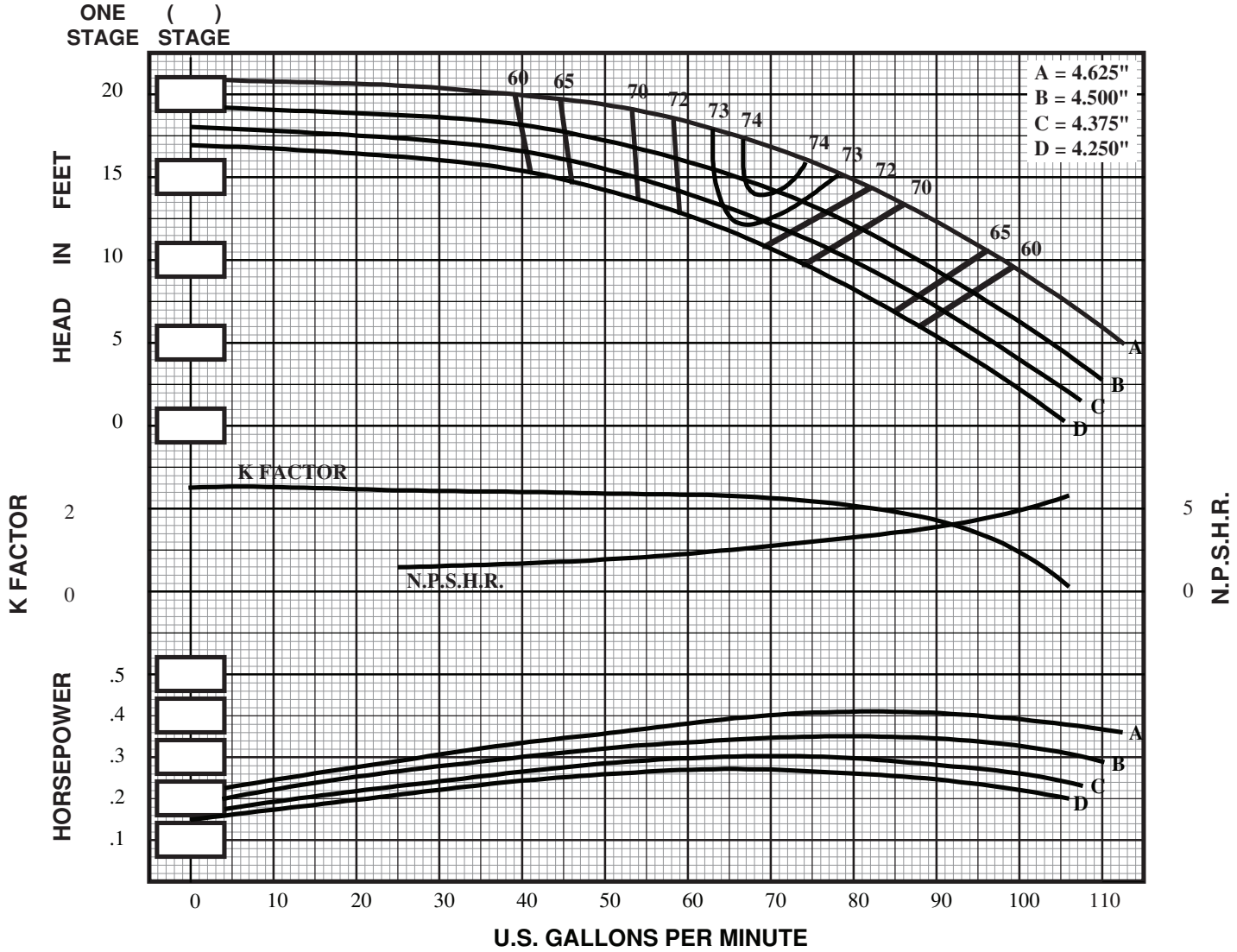

IMPELLER TYPE	= ENCLOSED	STD. SHAFT DIA.	= 1.000"	NO. STAGES	EFF. CHANGE	MATERIAL	B.E.P. EFF. CHANGE
IMPELLER NO.	= SP6L	MAX. SHAFT DIA.	= 1.000"				
IMPELLER WT. - LBS.	= 2.60	STD. LATERAL	= .54"	1	-4	IMP. - C.I.	-3
ONE STAGE WT. - LBS.	= 55.0	DISCHARGE SIZES	= 3"/ 4"	2	-3	IMP. - NI-RI	-2
ADD'L STAGE WT. - LBS.	= 18.5	SUCTION SIZES	= 4"/ BELL	3	-2	IMP. - S.S.	-4
MAX. SPHERE SIZE	= .38"	ONE STAGE WR^2	= .033	4	-1	BOWL - BRZ.	-3
MIN. SUBMERGENCE*	= 11"		=	5	0	BOWL - NI-RI	-1
Δ CONSULT FACTORY			v18.2			BOWL - S.S.	-4

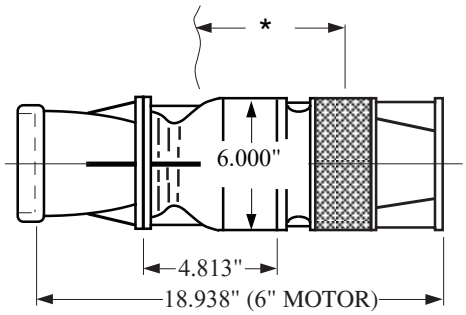

SUBMERSIBLE TURBINE

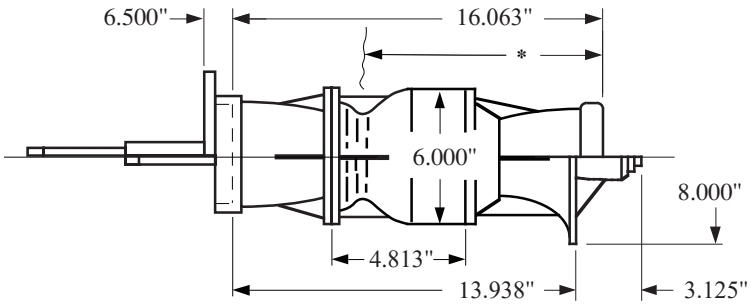

LINESHAFT TURBINE

SIMFLO®

Section 202
Date 9/1/06

SP6M

1770 RPM

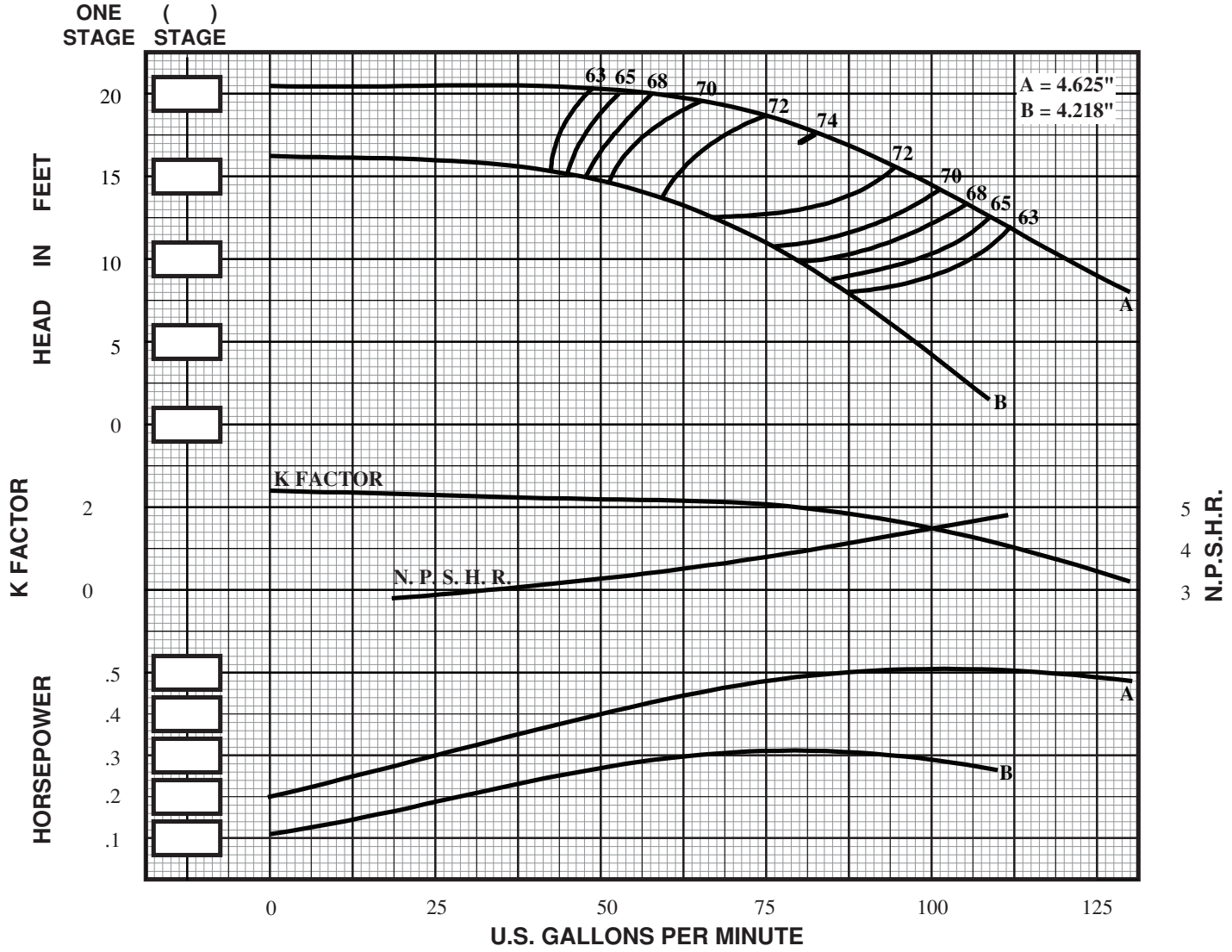

IMPELLER TYPE	= ENCLOSED	STD. SHAFT DIA.	= 1.000"	NO. STAGES	EFF. CHANGE	MATERIAL	B.E.P. EFF. CHANGE
IMPELLER NO.	= SP6M	MAX. SHAFT DIA.	= 1.000"				
IMPELLER WT. - LBS.	= 2.95	STD. LATERAL	= .41"	1	-4	IMP. - C.I.	-3
ONE STAGE WT. - LBS.	= 60.0	DISCHARGE SIZES	= 3"/ 4"	2	-3	IMP. - NI-RI	-2
ADD'L STAGE WT. - LBS.	= 20.0	SUCTION SIZES	= 4"/ BELL	3	-2	IMP. - S.S.	-4
MAX. SPHERE SIZE	= .31"	ONE STAGE WR^2	= .037	4	-1	BOWL - BRZ.	-3
MIN. SUBMERGENCE*	= 11"		=	5	0	BOWL - NI-RI	-1
Δ CONSULT FACTORY			v18.2			BOWL - S.S.	-4

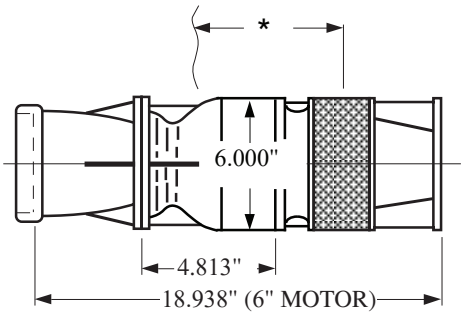

SUBMERSIBLE TURBINE

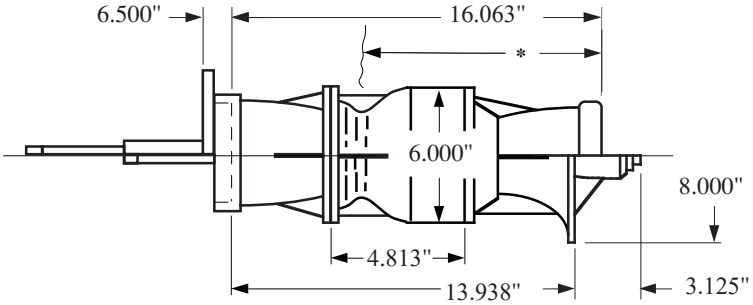

LINESHAFT TURBINE

SIMFLO®

Section 202
Date 9/1/06

SP6H

1770 RPM

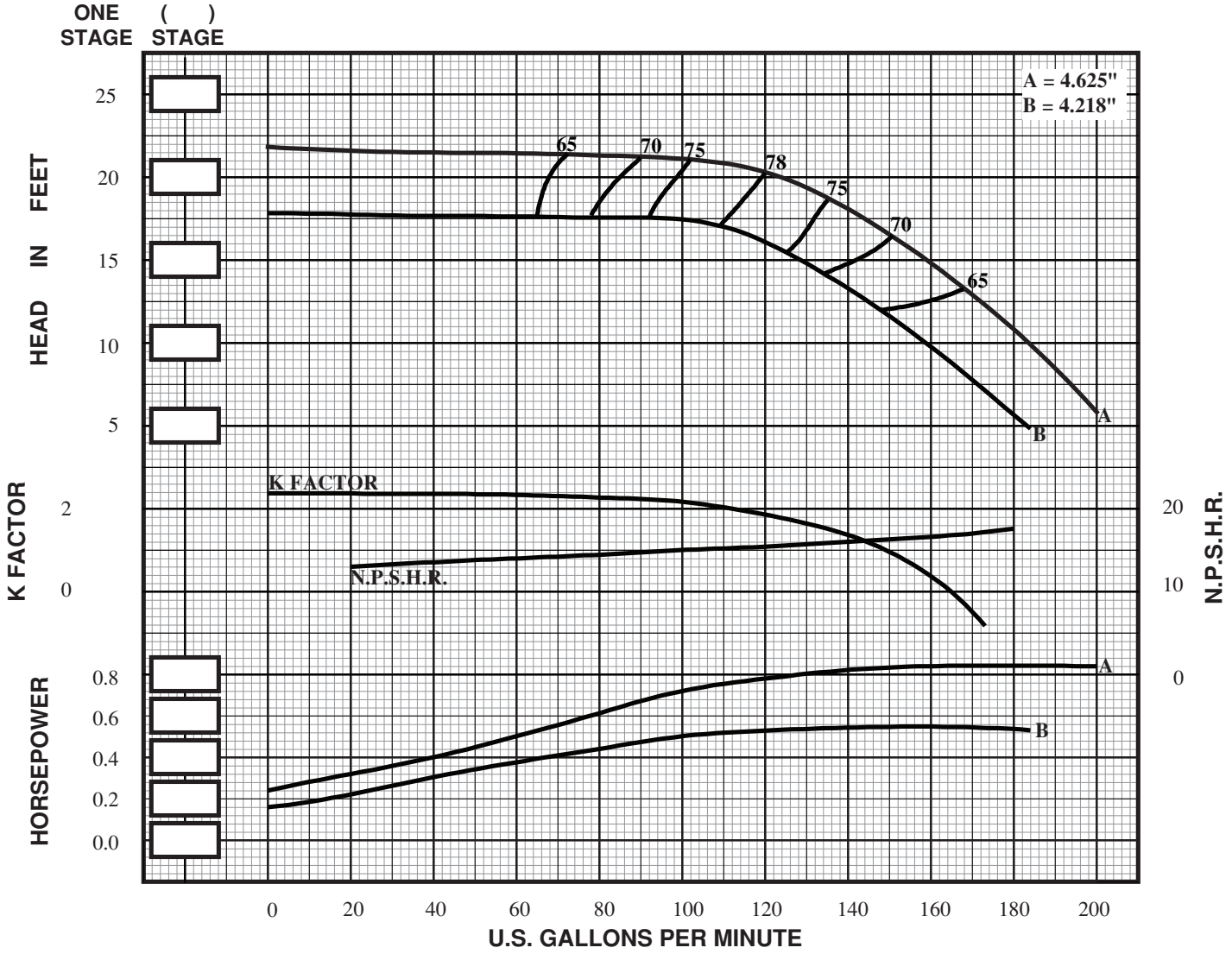

IMPELLER TYPE = ENCLOSED	STD. SHAFT DIA. = 1.000"	NO. STAGES	EFF. CHANGE	MATERIAL	B.E.P. EFF. CHANGE
IMPELLER NO. = SP6H	MAX. SHAFT DIA. = 1.000"				
IMPELLER WT. - LBS. = 2.75	STD. LATERAL = .28"	1	-4	IMP. - C.I.	-3
ONE STAGE WT. - LBS. = 60.0	DISCHARGE SIZES = 3"/ 4"	2	-3	IMP. - NI-RI	-2
ADD'L STAGE WT. - LBS. = 20.0	SUCTION SIZES = 4"/ BELL	3	-2	IMP. - S.S.	-4
MAX. SPHERE SIZE = .38"	ONE STAGE WR^2 = .034	4	-1	BOWL - BRZ.	-3
MIN. SUBMERGENCE* = 11"	=	5	0	BOWL - NI-RI	-1
Δ CONSULT FACTORY	v18.2			BOWL - S.S.	-4

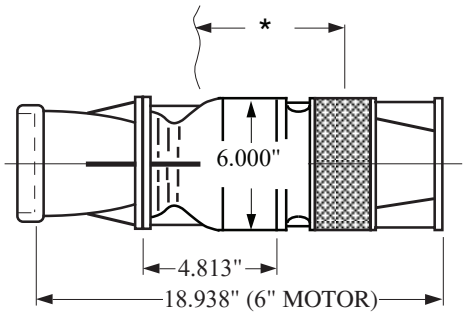

SUBMERSIBLE TURBINE

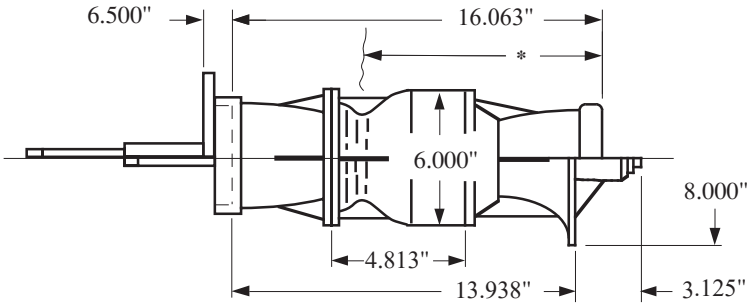

LINESHAFT TURBINE

SIMFLO®

Section 202
Date 9/1/06

SP7L

1770 RPM

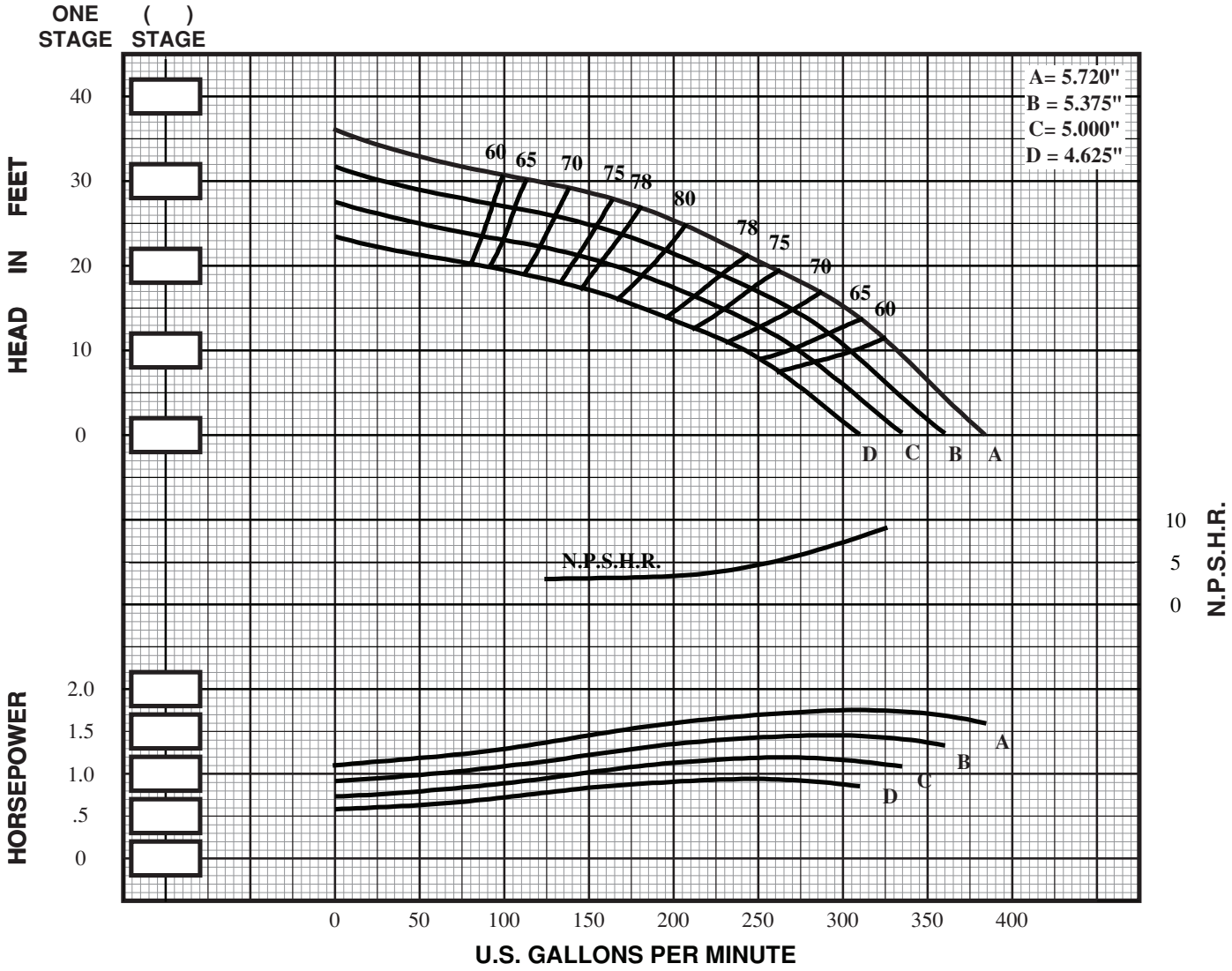

IMPELLER TYPE	= ENCLOSED	STD. SHAFT DIA.	= 1.250"	NO. STAGES	EFF. CHANGE	MATERIAL	B.E.P. EFF. CHANGE
IMPELLER NO.	= SP7L	MAX. SHAFT DIA.	= 1.250"				
IMPELLER WT. - LBS.	= 4.05	STD. LATERAL	= .59"	1	-4	IMP. - C.I.	-2
ONE STAGE WT. - LBS.	= 100.0	DISCHARGE SIZES	= 4"/ 5"/ 6"	2	-2	IMP. - NI-RI	-2
ADD'L STAGE WT. - LBS.	= 34.0	SUCTION SIZES	= 5"/ BELL	3	0	IMP. - S.S.	-5
MAX. SPHERE SIZE	= .53"	ONE STAGE WR^2	= .073	4	0	BOWL - BRZ.	-2
MIN. SUBMERGENCE*	= 11"	K-FACTOR, MAX	= 4.20	5	0	BOWL - NI-RI	-1
Δ CONSULT FACTORY			v18.1			BOWL - S.S.	-4

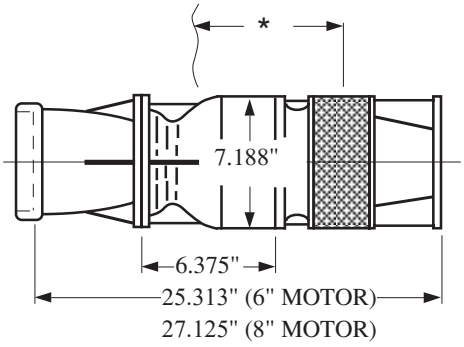

SUBMERSIBLE TURBINE

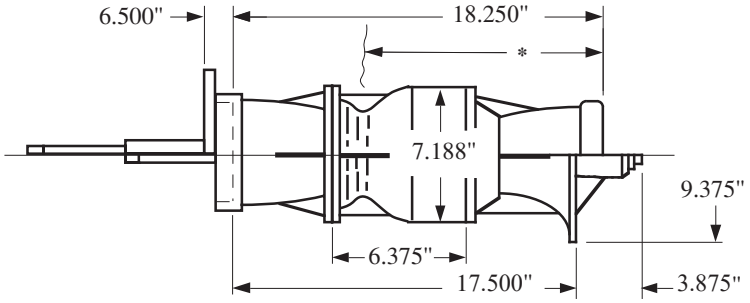

LINESHAFT TURBINE

SIMFLO®

Section 202
Date 9/1/06

SP7H

1770 RPM

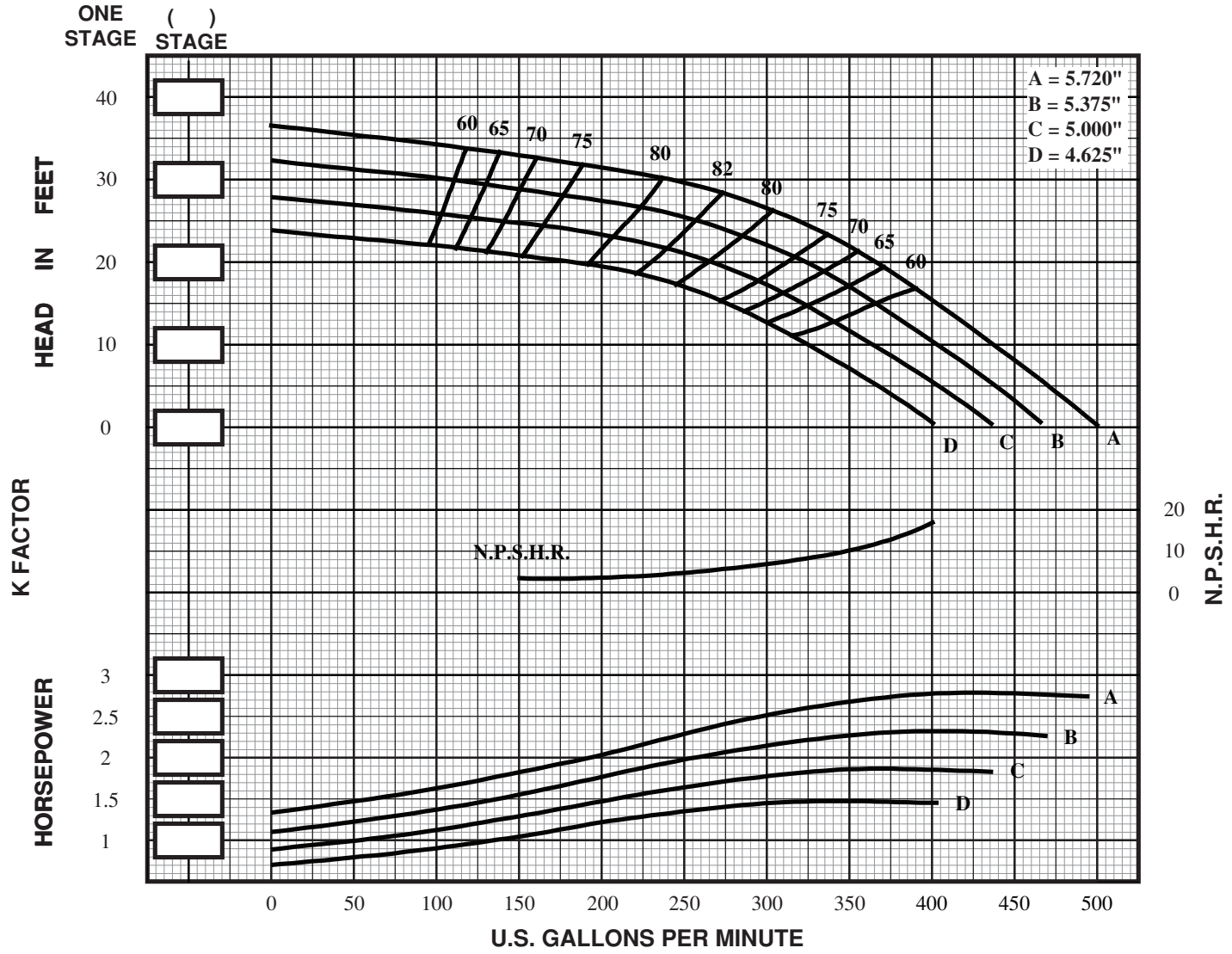

IMPELLER TYPE	= ENCLOSED	STD. SHAFT DIA.	= 1.250"	NO. STAGES	EFF. CHANGE	MATERIAL	B.E.P. EFF. CHANGE
IMPELLER NO.	= SP7H	MAX. SHAFT DIA.	= 1.250"				
IMPELLER WT. - LBS.	= 4.00	STD. LATERAL	= .59"	1	-3	IMP. - C.I.	-2
ONE STAGE WT. - LBS.	= 100.0	DISCHARGE SIZES	= 4"/ 5"/ 6"	2	-1	IMP. - NI-RI	-2
ADD'L STAGE WT. - LBS.	= 34.0	SUCTION SIZES	= 5"/ BELL	3	0	IMP. - S.S.	-5
MAX. SPHERE SIZE	= .53"	ONE STAGE WR^2	= .072	4	0	BOWL - BRZ.	-2
MIN. SUBMERGENCE*	= 11"	K-FACTOR, MAX	= 4.30	5	0	BOWL - NI-RI	-1
						BOWL - S.S.	-4

Δ CONSULT FACTORY

v18.1

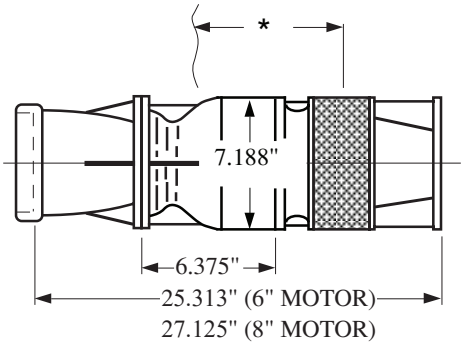

SUBMERSIBLE TURBINE

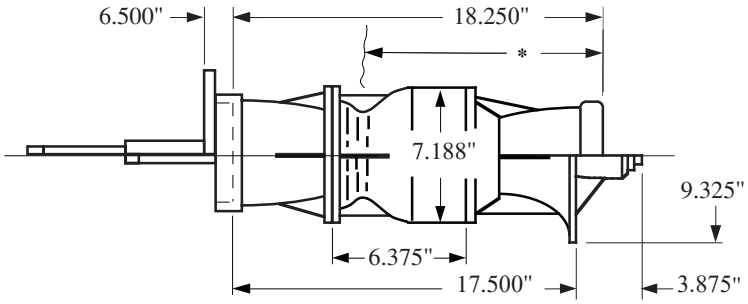

LINESHAFT TURBINE

SIMFLO®

Section 202
Date 9/1/06

SK7L

1770 RPM

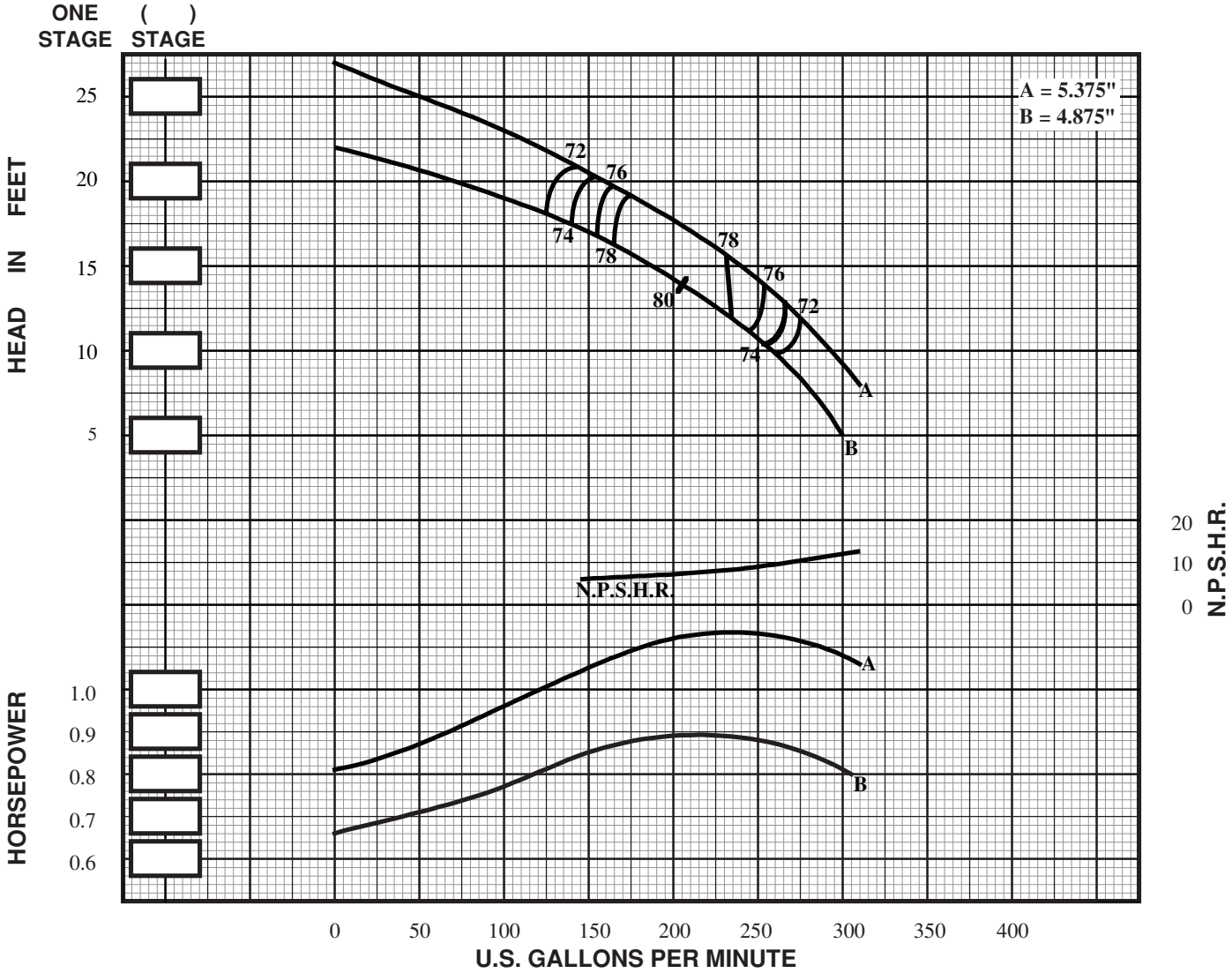

IMPELLER TYPE	= ENCLOSED	STD. SHAFT DIA.	= 1.000"	NO. STAGES	EFF. CHANGE	MATERIAL	B.E.P. EFF. CHANGE
IMPELLER NO.	= SK7L	MAX. SHAFT DIA.	= 1.000"				
IMPELLER WT. - LBS.	= 3.35	STD. LATERAL	= .94"	1	-3.5	IMP. - C.I.	Δ
ONE STAGE WT. - LBS.	= 61.0	DISCHARGE SIZES	= 4"/ 5"	2	-2.0	IMP. - NI-RI	Δ
ADD'L STAGE WT. - LBS.	= 22.0	SUCTION SIZES	= BELL	3	-1.0	IMP. - S.S.	Δ
MAX. SPHERE SIZE	= .44"	ONE STAGE WR^2	= .051	4	-0.5	BOWL - BRZ.	Δ
MIN. SUBMERGENCE*	= 20"	K FACTOR	= 4.49	5	0.0	BOWL - NI-RI	Δ
						BOWL - S.S.	Δ

Δ CONSULT FACTORY

v18.1

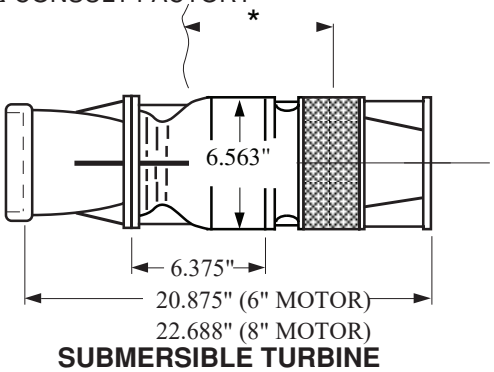

SUBMERSIBLE TURBINE

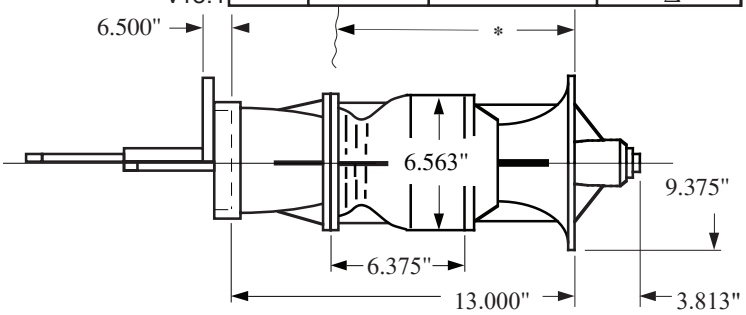

LINESHAFT TURBINE

SK7M

1770 RPM

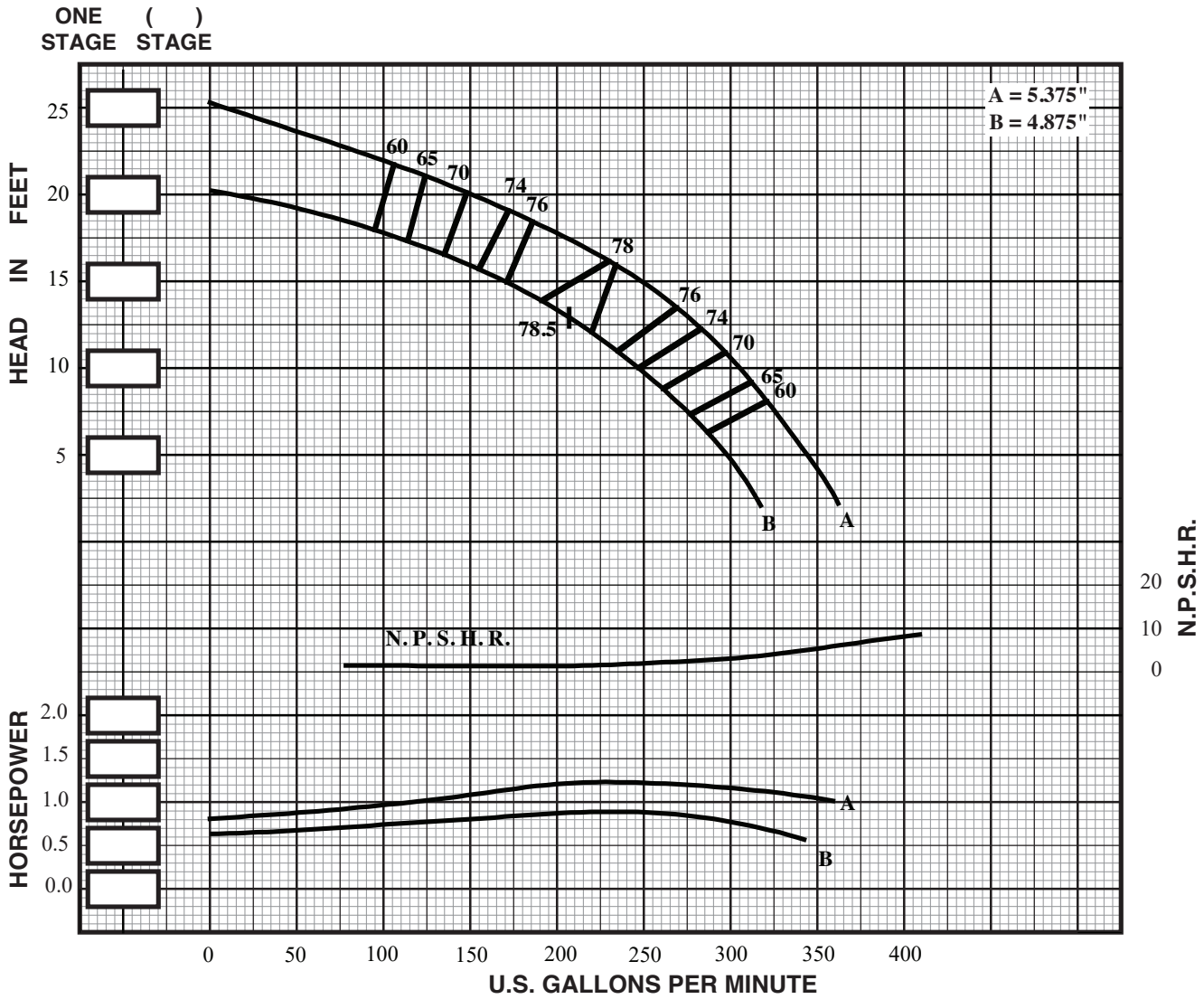

IMPELLER TYPE	= ENCLOSED	STD. SHAFT DIA.	= 1.000"	NO. STAGES	EFF. CHANGE	MATERIAL	B.E.P. EFF. CHANGE
IMPELLER NO.	= SK7M	MAX. SHAFT DIA.	= 1.000"				
IMPELLER WT. - LBS.	= 2.90	STD. LATERAL	= .75"	1	-3.5	IMP. - C.I.	Δ
ONE STAGE WT. - LBS.	= 59.0	DISCHARGE SIZES	= 4"/ 5"	2	-2.0	IMP. - NI-RI	Δ
ADD'L STAGE WT. - LBS.	= 20.0	SUCTION SIZES	= BELL	3	-1.0	IMP. - S.S.	Δ
MAX. SPHERE SIZE	= .56"	ONE STAGE WR^2	= .046	4	-0.5	BOWL - BRZ.	Δ
MIN. SUBMERGENCE*	= 20"	K FACTOR	= 4.29	5	0.0	BOWL - NI-RI	Δ
Δ CONSULT FACTORY			v18.1			BOWL - S.S.	Δ

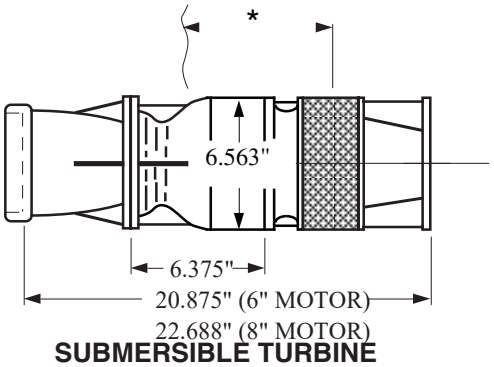

SUBMERSIBLE TURBINE

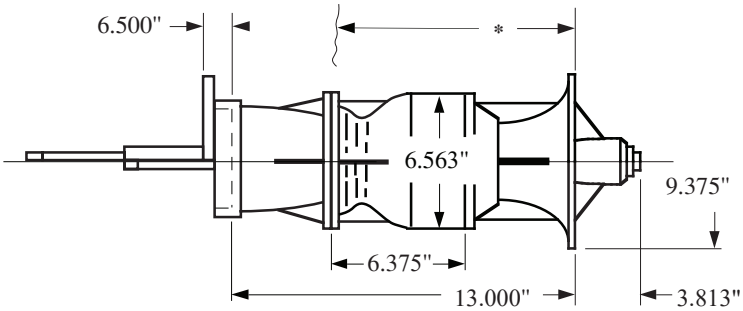

LINESHAFT TURBINE

SIMFLO®

Section 202
Date 1/1/12

SK7H

1770 RPM

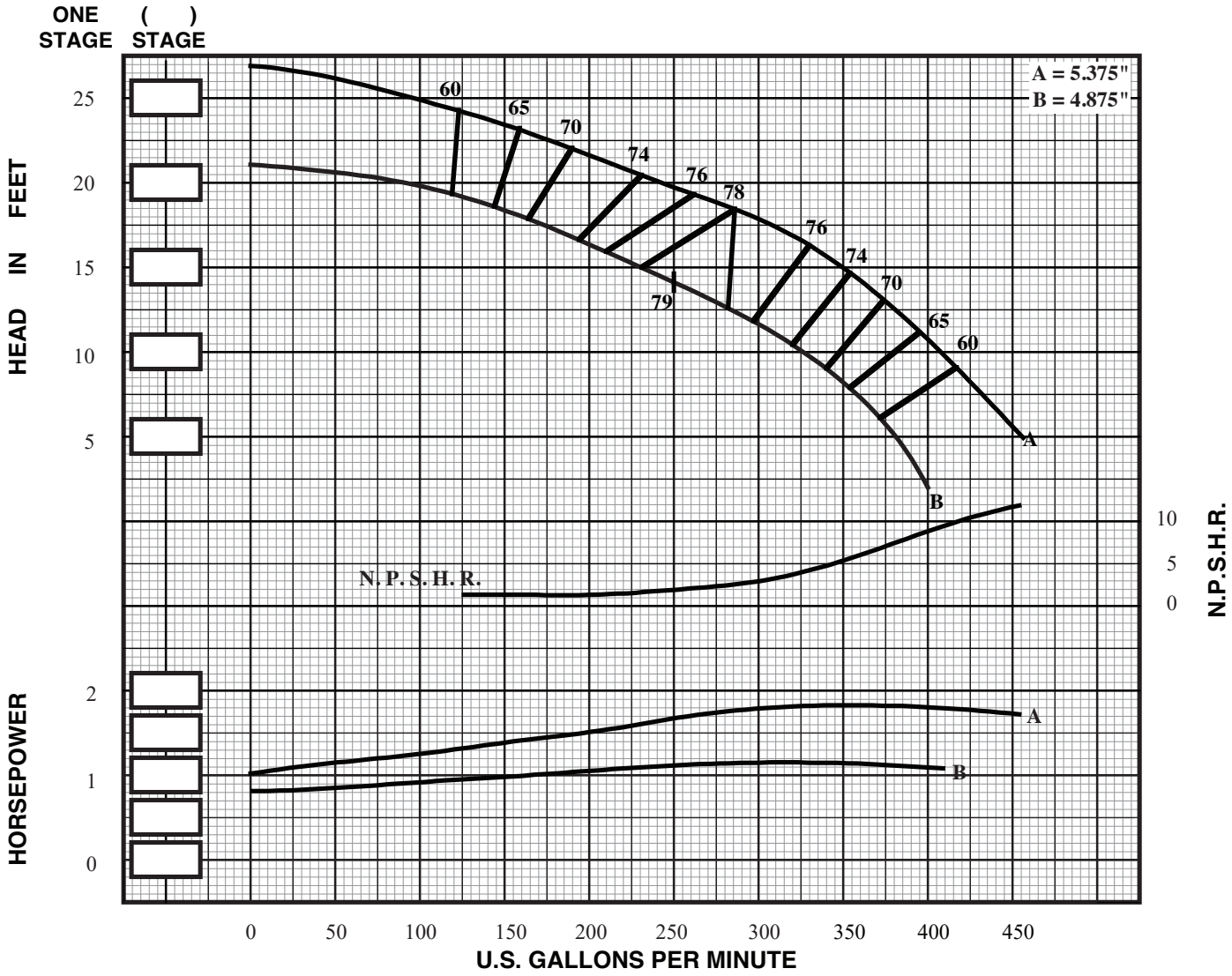

IMPELLER TYPE	= ENCLOSED	STD. SHAFT DIA.	= 1.000"	NO. STAGES	EFF. CHANGE	MATERIAL	B.E.P. EFF. CHANGE
IMPELLER NO.	= SK7H	MAX. SHAFT DIA.	= 1.000"				
IMPELLER WT. - LBS.	= 3.25	STD. LATERAL	= .75"	1	-3.5	IMP. - C.I.	Δ
ONE STAGE WT. - LBS.	= 60.0	DISCHARGE SIZES	= 4"/ 5"	2	-2.0	IMP. - NI-RI	Δ
ADD'L STAGE WT. - LBS.	= 21.0	SUCTION SIZES	= BELL	3	-1.0	IMP. - S.S.	Δ
MAX. SPHERE SIZE	= .56"	ONE STAGE WR^2	= .050	4	-0.5	BOWL - BRZ.	Δ
MIN. SUBMERGENCE*	= 20"	K FACTOR	= 4.27	5	0.0	BOWL - NI-RI	Δ
Δ CONSULT FACTORY			v18.1			BOWL - S.S.	Δ

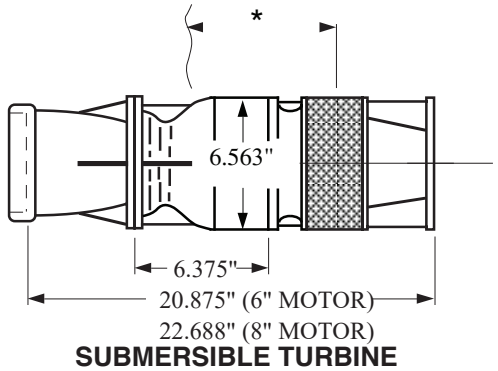

SUBMERSIBLE TURBINE

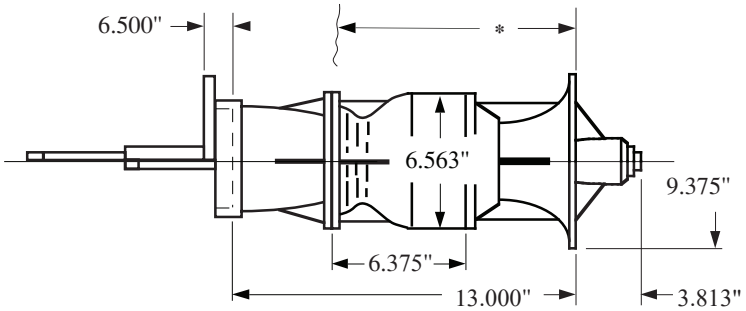

LINESHAFT TURBINE

SIMFLO®

Section 202
Date 9/1/06

SM7M

1770 RPM

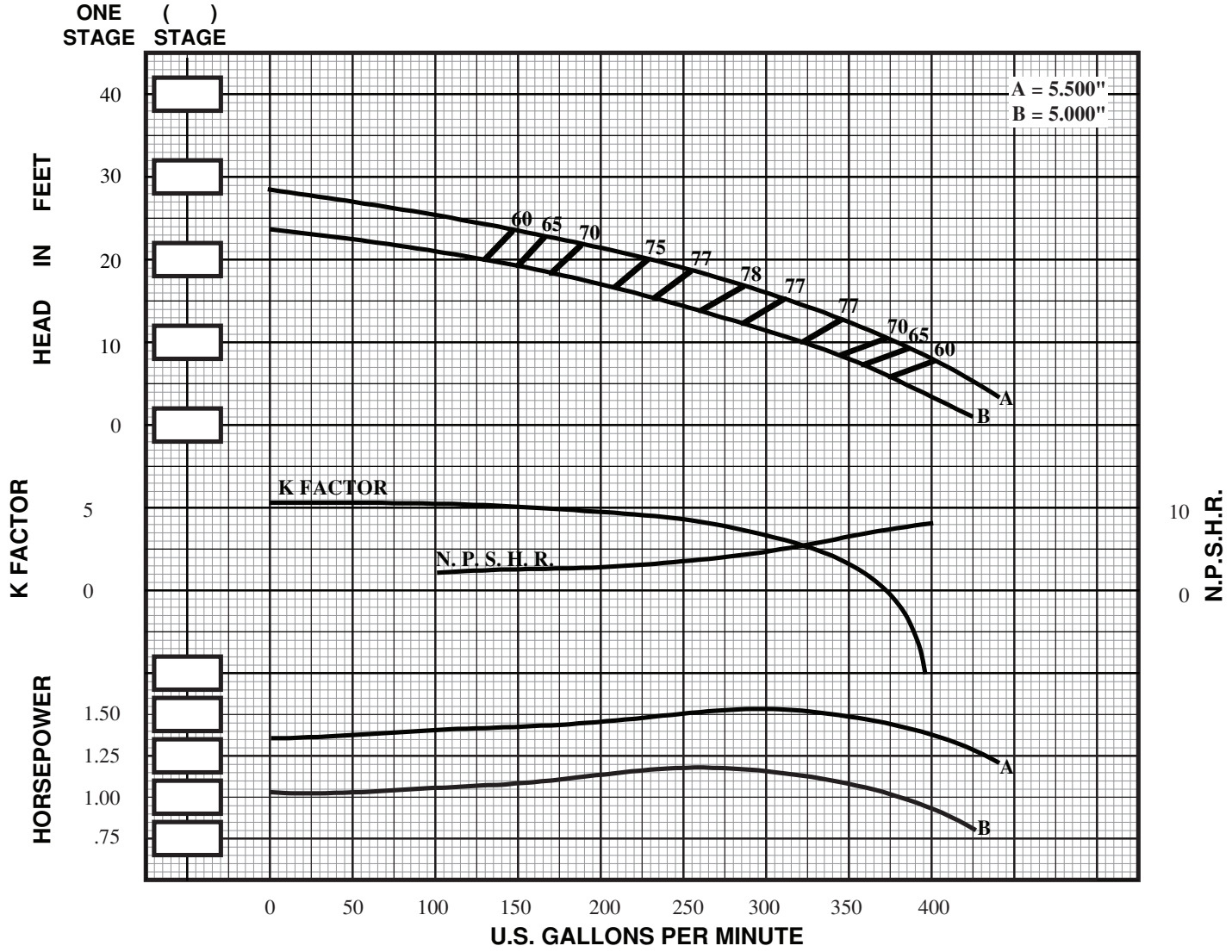

IMPELLER TYPE	= ENCLOSED	STD. SHAFT DIA.	= 1.250"	NO. STAGES	EFF. CHANGE	MATERIAL	B.E.P. EFF. CHANGE
IMPELLER NO.	= SM7M	MAX. SHAFT DIA.	= 1.250"				
IMPELLER WT. - LBS.	= 6.2	STD. LATERAL	= .94"	1	-3	IMP. - C.I.	-2
ONE STAGE WT. - LBS.	= 100.0	DISCHARGE SIZES	= 4"/ 5"/ 6"	2	-2	IMP. - NI-RI	-2
ADD'L STAGE WT. - LBS.	= 40.0	SUCTION SIZES	= 5"/ BELL	3	-1	IMP. - S.S.	-5
MAX. SPHERE SIZE	= .50"	ONE STAGE WR^2	= .100	4	0	BOWL - BRZ.	-3
MIN. SUBMERGENCE*	= 12"		=	5	0	BOWL - NI-RI	-1
Δ CONSULT FACTORY			v18.1			BOWL - S.S.	-5

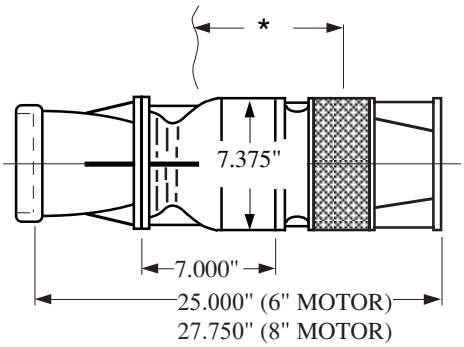

SUBMERSIBLE TURBINE

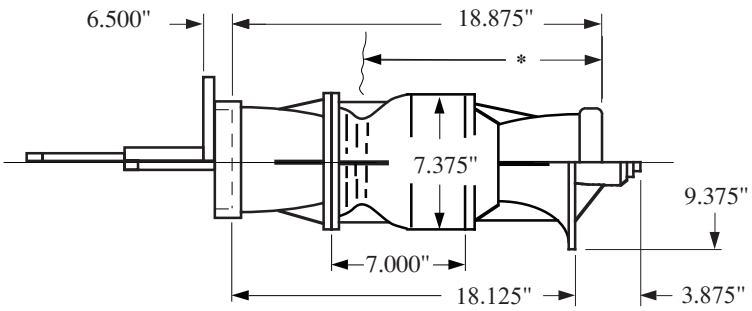

LINESHAFT TURBINE

SIMFLO®

Section 202
Date 9/1/06

SP8L

1770 RPM

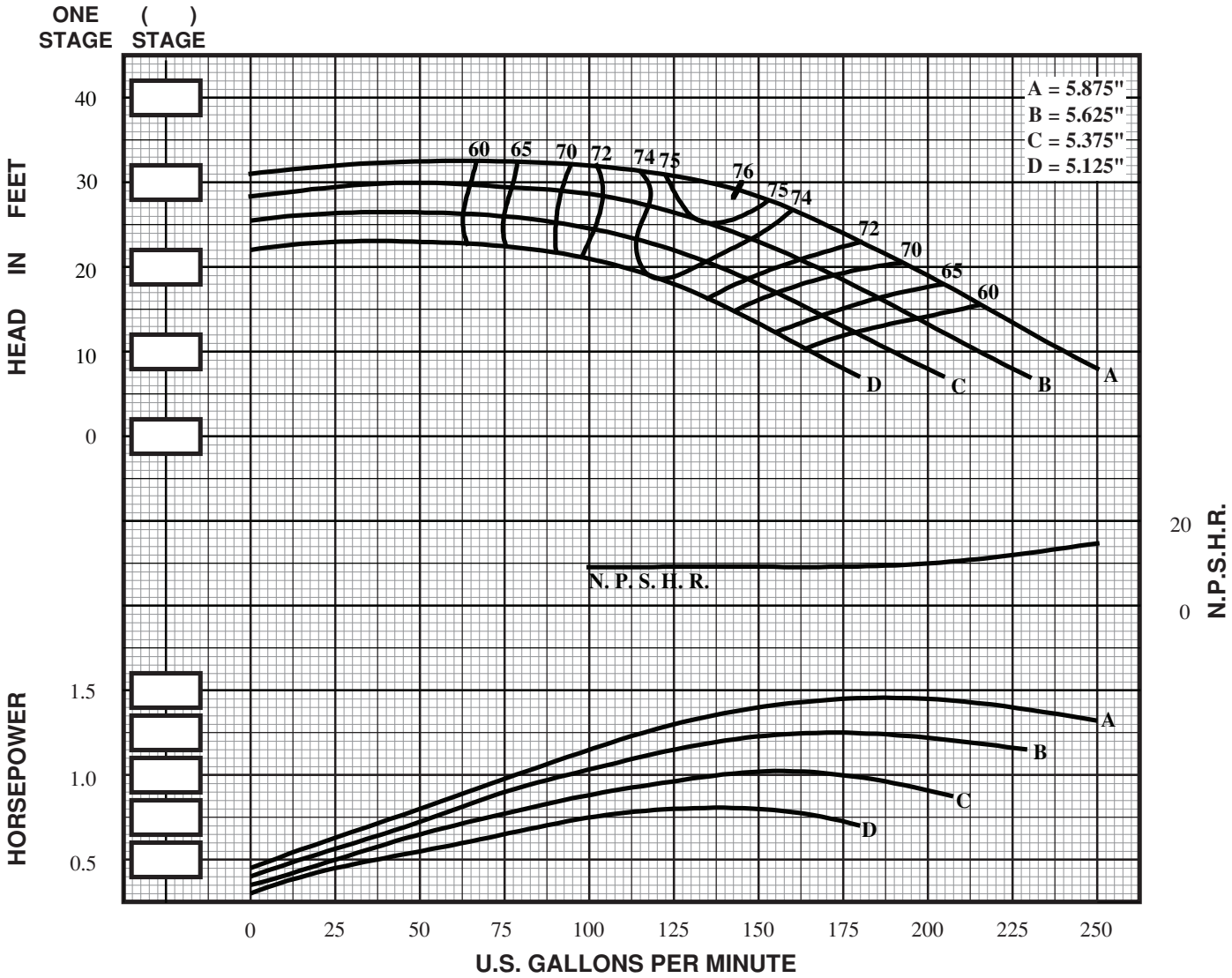

IMPELLER TYPE = ENCLOSED	STD. SHAFT DIA. = 1.250"	NO. STAGES	EFF. CHANGE	MATERIAL	B.E.P. EFF. CHANGE
IMPELLER NO. = SP8L	MAX. SHAFT DIA. = 1.250"				
IMPELLER WT. - LBS. = 5.40	STD. LATERAL = .88"	1	-4	IMP. - C.I.	Δ
ONE STAGE WT. - LBS. = 122.0	DISCHARGE SIZES = 4"/ 5"/ 6"	2	-3	IMP. - NI-RI	Δ
ADD'L STAGE WT. - LBS. = 40.0	SUCTION SIZES = 5"/ BELL	3	-2	IMP. - S.S.	Δ
MAX. SPHERE SIZE = .31"	ONE STAGE WR^2 = .108	4	-1	BOWL - BRZ.	Δ
MIN. SUBMERGENCE* = 11"	K-FACTOR, MAX. = 3.60	5	0	BOWL - NI-RI	Δ
Δ CONSULT FACTORY	v18.1			BOWL - S.S.	Δ

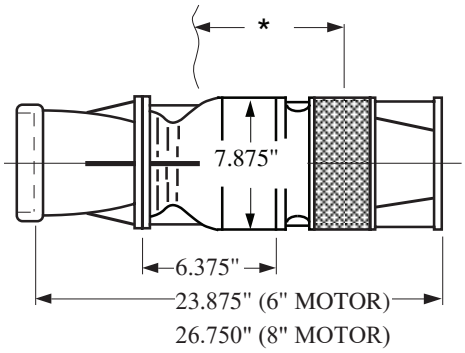

SUBMERSIBLE TURBINE

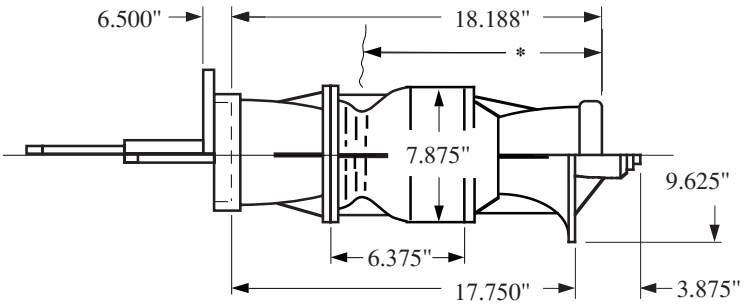

LINESHAFT TURBINE

SIMFLO®

Section 202
Date 9/1/06

SP8M

1770 RPM

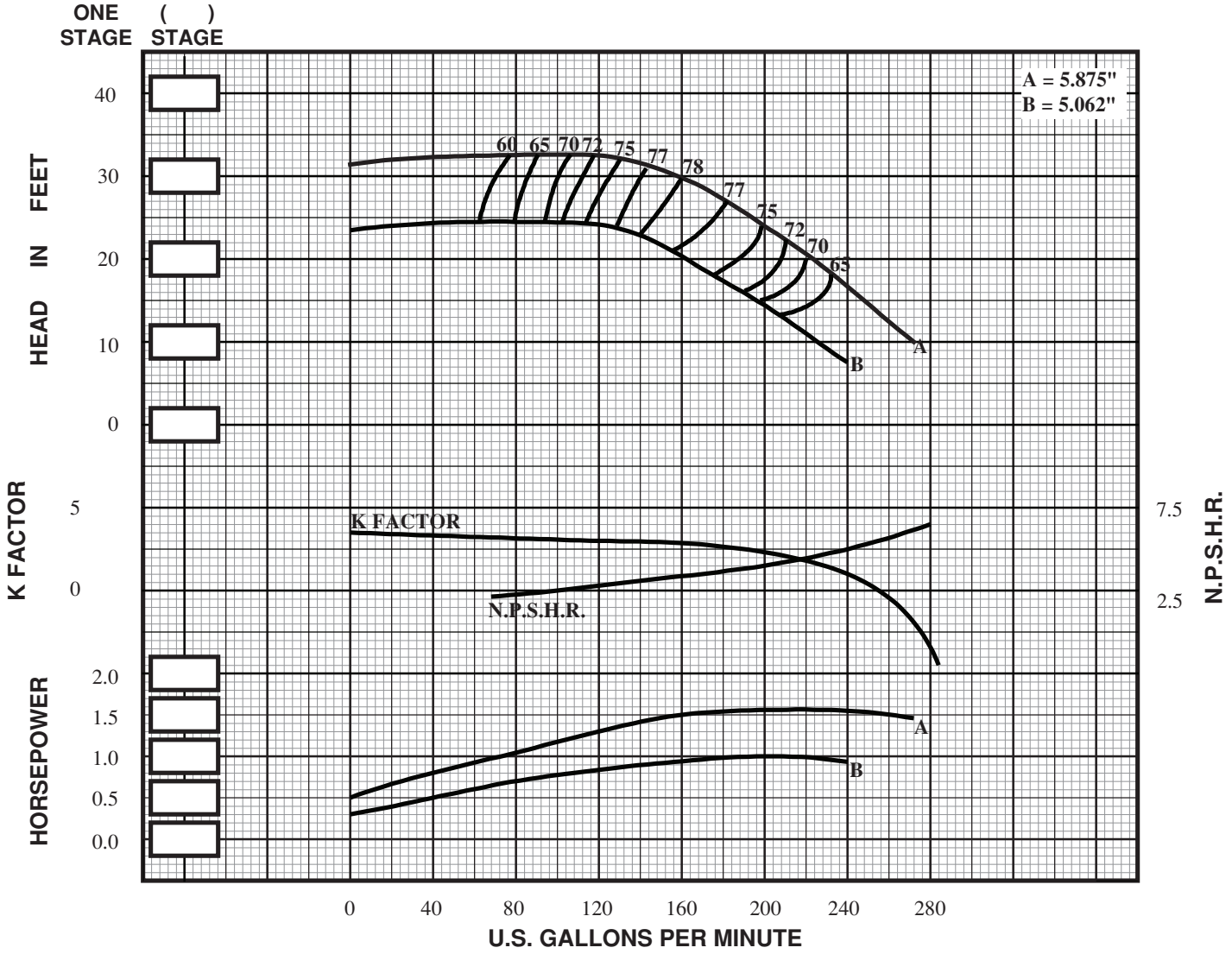

IMPELLER TYPE	= ENCLOSED	STD. SHAFT DIA.	= 1.250"	NO. STAGES	EFF. CHANGE	MATERIAL	B.E.P. EFF. CHANGE
IMPELLER NO.	= SP8M	MAX. SHAFT DIA.	= 1.250"				
IMPELLER WT. - LBS.	= 5.15	STD. LATERAL	= .75"	1	-4	IMP. - C.I.	-2
ONE STAGE WT. - LBS.	= 100.0	DISCHARGE SIZES	= 4"/ 5"/ 6"	2	-3	IMP. - NI-RI	-2
ADD'L STAGE WT. - LBS.	= 40.0	SUCTION SIZES	= 5"/ BELL	3	-2	IMP. - S.S.	-4
MAX. SPHERE SIZE	= .56"	ONE STAGE WR^2	= .105	4	-1	BOWL - BRZ.	-2
MIN. SUBMERGENCE*	= 11"		=	5	0	BOWL - NI-RI	-1
Δ CONSULT FACTORY			v18.1			BOWL - S.S.	-3

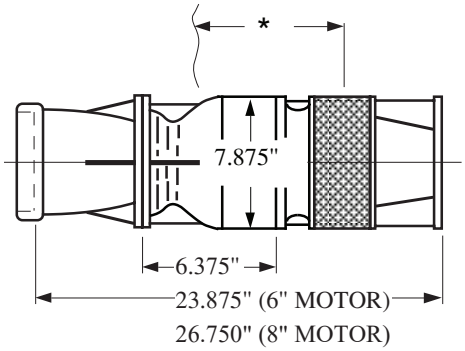

SUBMERSIBLE TURBINE

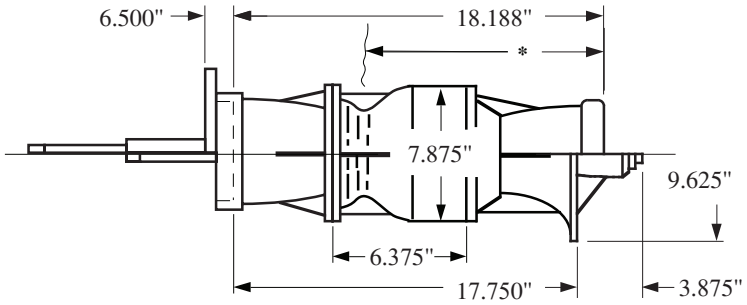

LINESHAFT TURBINE

SIMFLO®

Section 202
Date 9/1/06

SP8H

1770 RPM

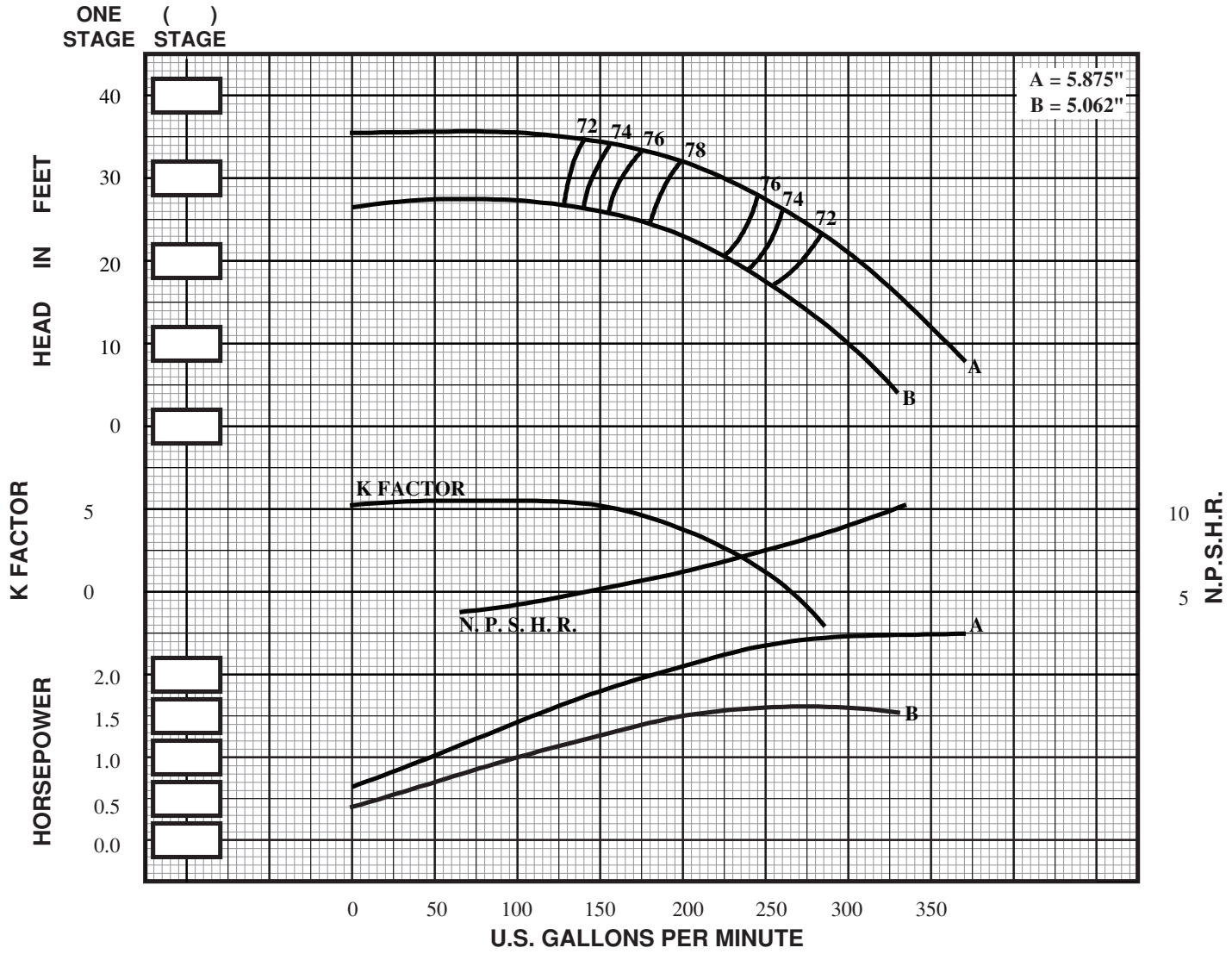

IMPELLER TYPE	= ENCLOSED	STD. SHAFT DIA.	= 1.250"	NO. STAGES	EFF. CHANGE	MATERIAL	B.E.P. EFF. CHANGE
IMPELLER NO.	= SP8H	MAX. SHAFT DIA.	= 1.250"				
IMPELLER WT. - LBS.	= 5.20	STD. LATERAL	= .56"	1	-4	IMP. - C.I.	-2
ONE STAGE WT. - LBS.	= 100.0	DISCHARGE SIZES	= 4"/ 5"/ 6"	2	-3	IMP. - NI-RI	-2
ADD'L STAGE WT. - LBS.	= 40.0	SUCTION SIZES	= 5"/ BELL	3	-2	IMP. - S.S.	-4
MAX. SPHERE SIZE	= .75"	ONE STAGE WR^2	= .105	4	-1	BOWL - BRZ.	-2
MIN. SUBMERGENCE*	= 11"		=	5	0	BOWL - NI-RI	-1
Δ CONSULT FACTORY			v18.1			BOWL - S.S.	-3

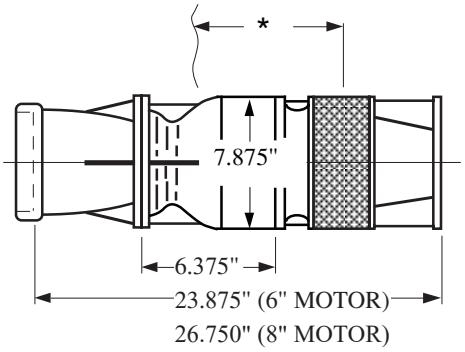

SUBMERSIBLE TURBINE

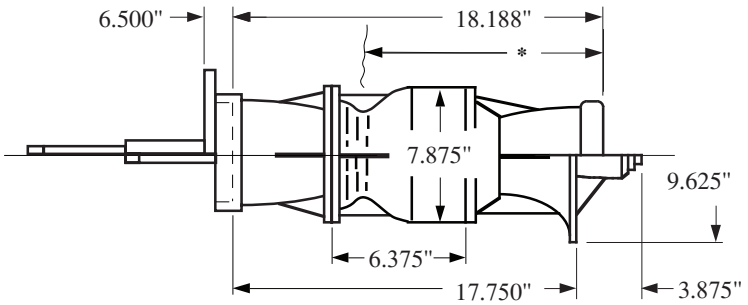

LINESHAFT TURBINE

SIMFLO®

Section 202
Date 9/1/06

SM8H

1770 RPM

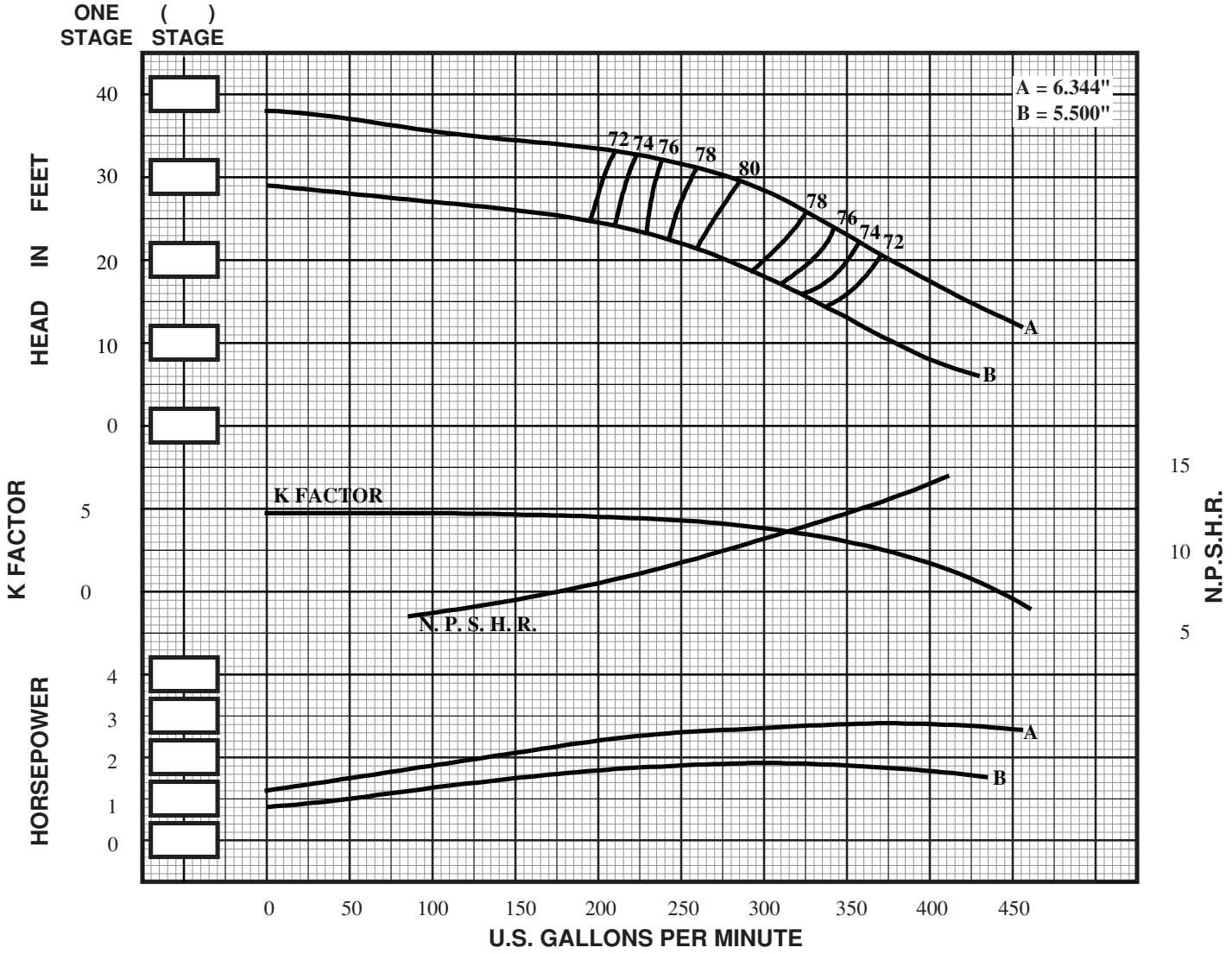

IMPELLER TYPE = ENCLOSED	STD. SHAFT DIA. = 1.250"	NO. STAGES	EFF. CHANGE	MATERIAL	B.E.P. EFF. CHANGE
IMPELLER NO. = SM8H	MAX. SHAFT DIA. = 1.250"				
IMPELLER WT. - LBS. = 7.3	STD. LATERAL = .58"	1	-4	IMP. - C.I.	-2
ONE STAGE WT. - LBS. = 100.0	DISCHARGE SIZES = 4"/ 5"/ 6"	2	-3	IMP. - NI-RI	-2
ADD'L STAGE WT. - LBS. = 40.0	SUCTION SIZES = 5"/ BELL	3	-2	IMP. - S.S.	-4
MAX. SPHERE SIZE = .66"	ONE STAGE WR^2 = .158	4	-1	BOWL - BRZ.	-2
MIN. SUBMERGENCE* = 11"	=	5	0	BOWL - NI-RI	-1
Δ CONSULT FACTORY	v18.1			BOWL - S.S.	-3

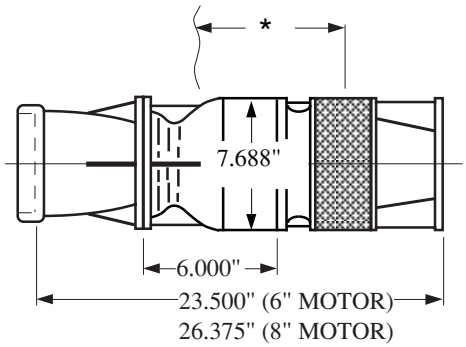

SUBMERSIBLE TURBINE

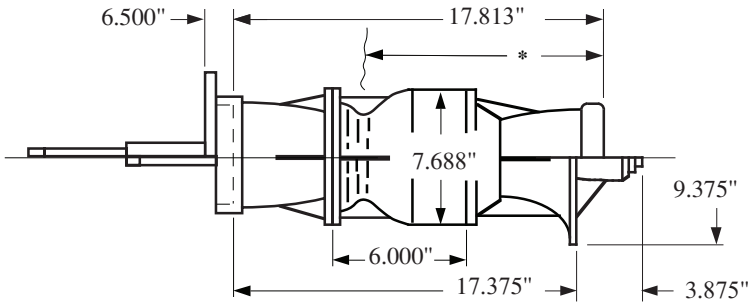

LINESHAFT TURBINE

SIMFLO®

Section 202
Date 3/30/18

SR8MO

1770 RPM

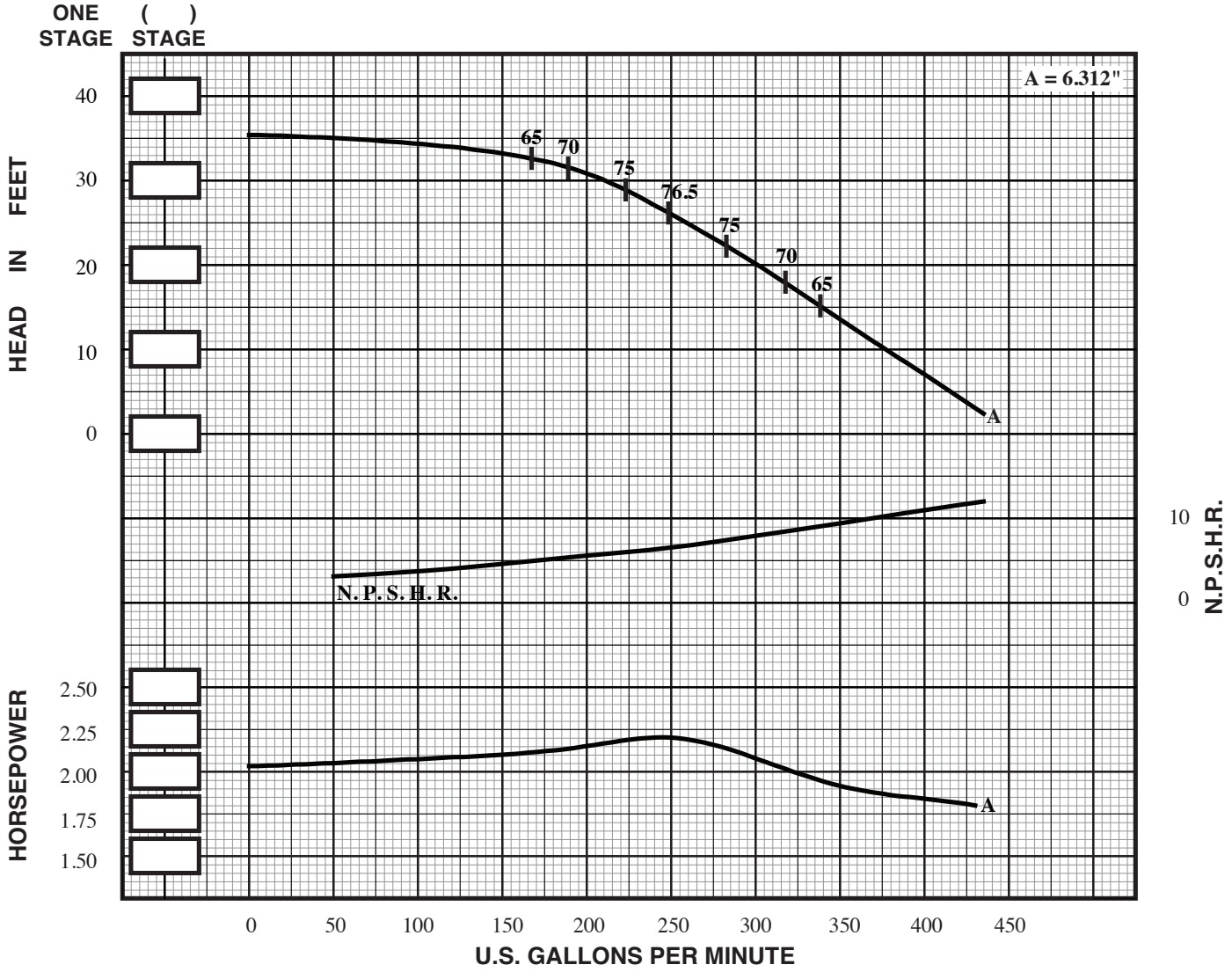

IMPELLER TYPE	= SEMI-OPEN	STD. SHAFT DIA.	= 1.250"	NO. STAGES	EFF. CHANGE	MATERIAL	B.E.P. EFF. CHANGE
IMPELLER NO.	= SR8MO	MAX. SHAFT DIA.	= 1.250"				
IMPELLER WT. - LBS.	= 4.80	STD. LATERAL	= .83"	1	-4	IMP. - C.I.	-4
ONE STAGE WT. - LBS.	= 100.0	DISCHARGE SIZES	= 4"/ 5"/ 6"	2	-3	IMP. - NI-RI	-2
ADD'L STAGE WT. - LBS.	= 40.0	SUCTION SIZES	= 5" / BELL	3	-2	IMP. - S.S.	NOT RECOM.
MAX. SPHERE SIZE	= .44"	ONE STAGE WR^2	= .107	4	-1	BOWL - BRZ.	-2
MIN. SUBMERGENCE*	= 11"	K-FACTOR, MAX.	= 6.1	5	0	BOWL - NI-RI	-1
Δ CONSULT FACTORY			v18.1			BOWL - S.S.	-3

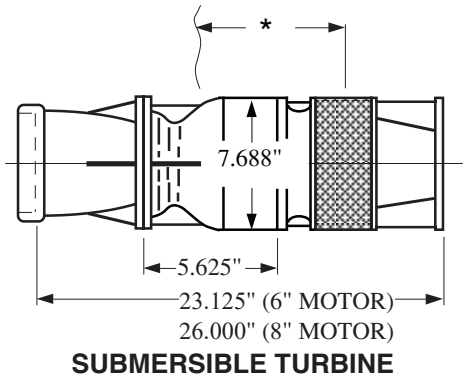

SUBMERSIBLE TURBINE

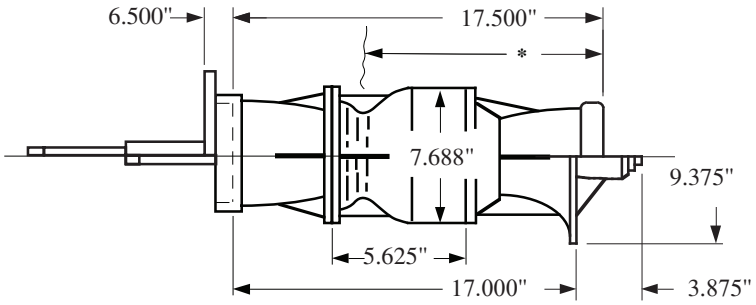

LINESHAFT TURBINE

SIMFLO®

SR8HO

1770 RPM

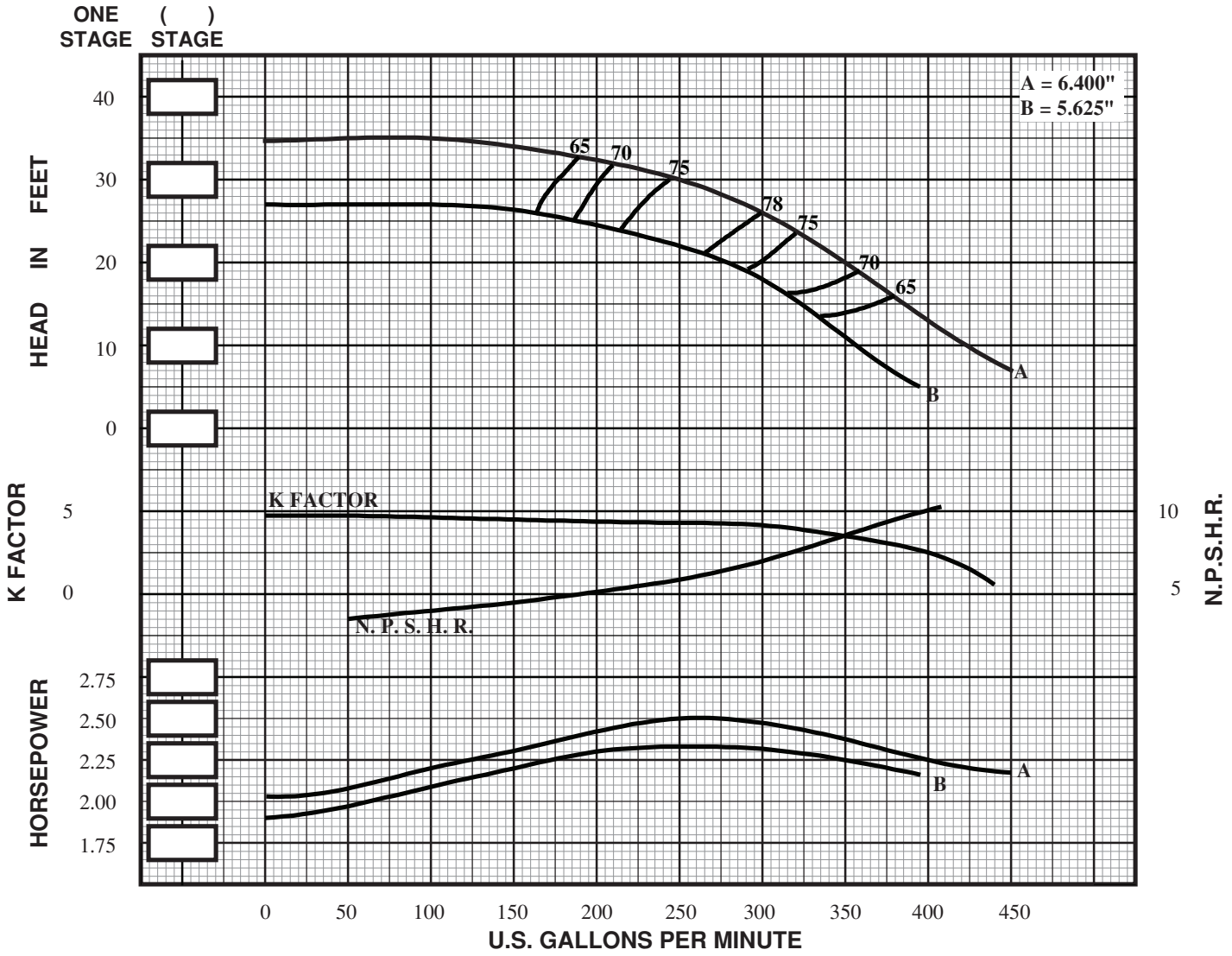

IMPELLER TYPE	= SEMI-OPEN	STD. SHAFT DIA.	= 1.250"	NO. STAGES	EFF. CHANGE	MATERIAL	B.E.P. EFF. CHANGE
IMPELLER NO.	= SR8HO	MAX. SHAFT DIA.	= 1.250"				
IMPELLER WT. - LBS.	= 5.00	STD. LATERAL	= .61"	1	-4	IMP. - C.I.	-4
ONE STAGE WT. - LBS.	= 100.0	DISCHARGE SIZES	= 4"/ 5"/ 6"	2	-3	IMP. - NI-RI	-2
ADD'L STAGE WT. - LBS.	= 40.0	SUCTION SIZES	= 5"/ BELL	3	-2	IMP. - S.S.	NOT RECOM.
MAX. SPHERE SIZE	= .59"	ONE STAGE WR^2	= .112	4	-1	BOWL - BRZ.	-2
MIN. SUBMERGENCE*	= 11"		=	5	0	BOWL - NI-RI	-1
Δ CONSULT FACTORY			v18.1			BOWL - S.S.	-3

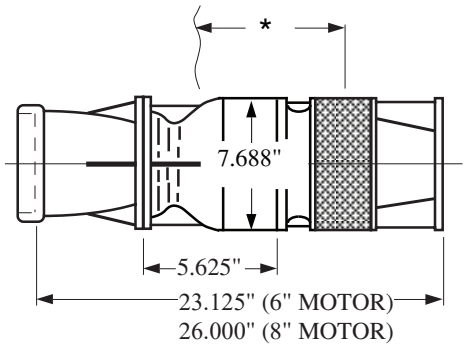

SUBMERSIBLE TURBINE

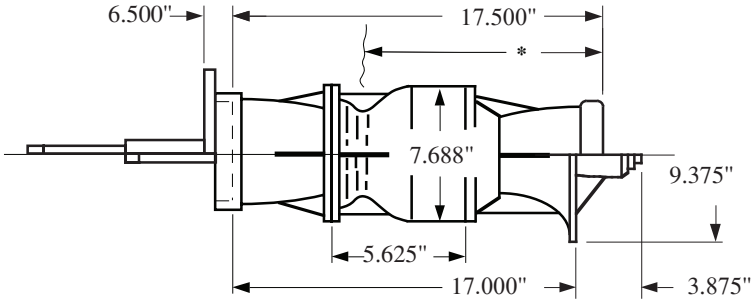

LINESHAFT TURBINE

SIMFLO®

Section 202
Date 9/1/06

SK8H

1770 RPM

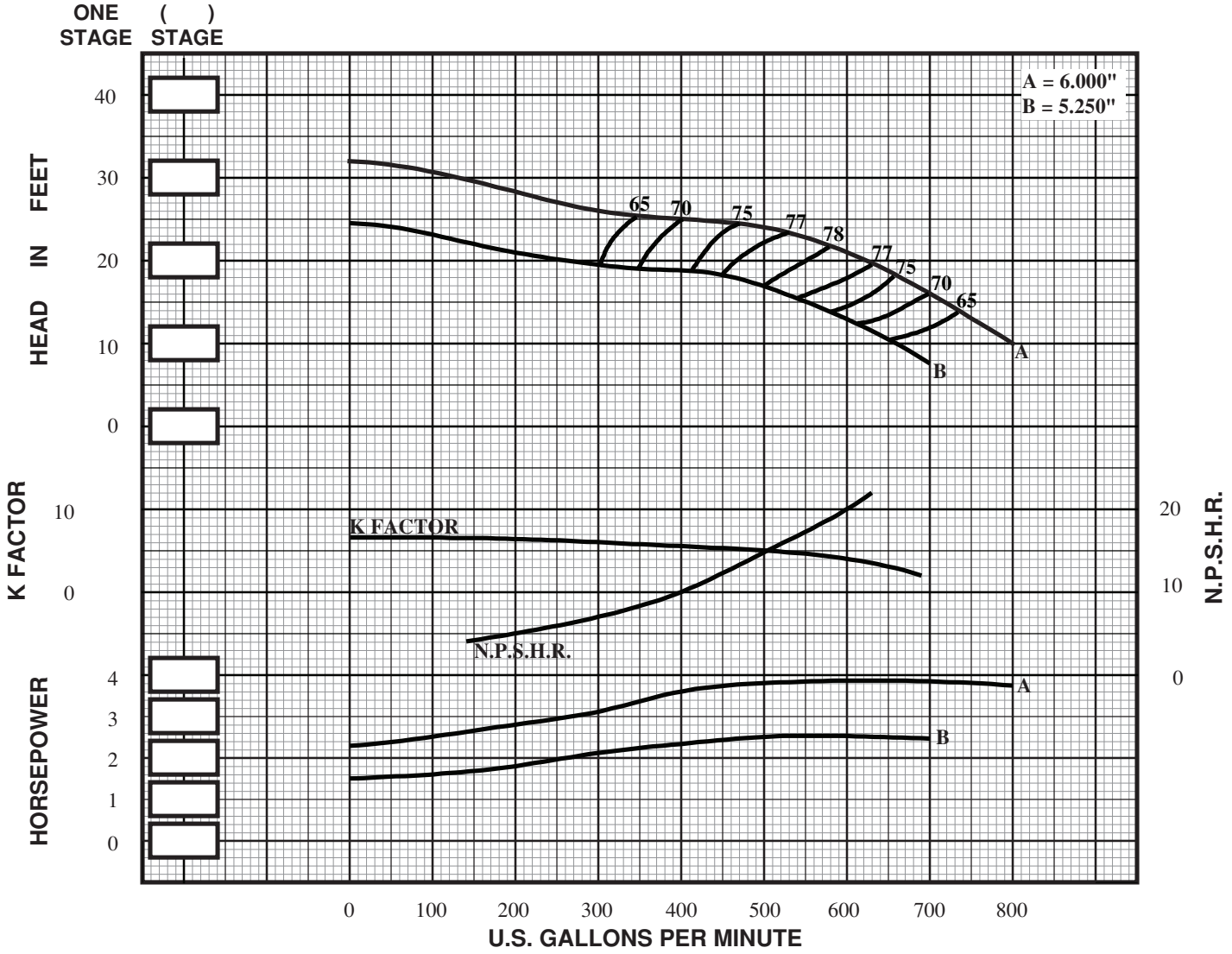

IMPELLER TYPE	= ENCLOSED	STD. SHAFT DIA.	= 1.500"	NO. STAGES	EFF. CHANGE	MATERIAL	B.E.P. EFF. CHANGE
IMPELLER NO.	= SK8H	MAX. SHAFT DIA.	= 1.500"				
IMPELLER WT. - LBS.	= 6.6	STD. LATERAL	= 1.00"	1	-4	IMP. - C.I.	-5
ONE STAGE WT. - LBS.	= 180.0	DISCHARGE SIZES	= 6"	2	-3	IMP. - NI-RI	-2
ADD'L STAGE WT. - LBS.	= 60.0	SUCTION SIZES	= 6"	3	-2	IMP. - S.S.	NOT RECOM.
MAX. SPHERE SIZE	= .75"	ONE STAGE WR^2	= .133	4	-1	BOWL - BRZ.	-3
MIN. SUBMERGENCE*	= 16"		=	5	0	BOWL - NI-RI	-1
Δ CONSULT FACTORY			v18.1			BOWL - S.S.	-4

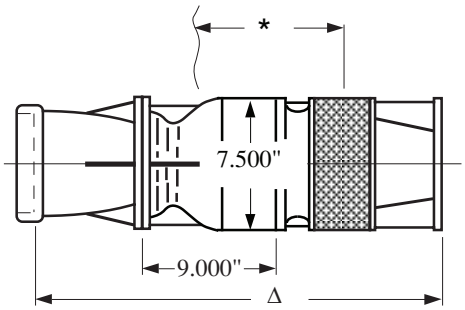

SUBMERSIBLE TURBINE

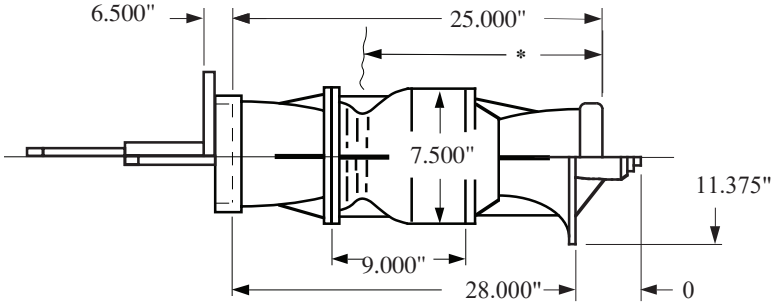

LINESHAFT TURBINE

SIMFLO®

Section 202
Date 7/1/11

SP9L

1770 RPM

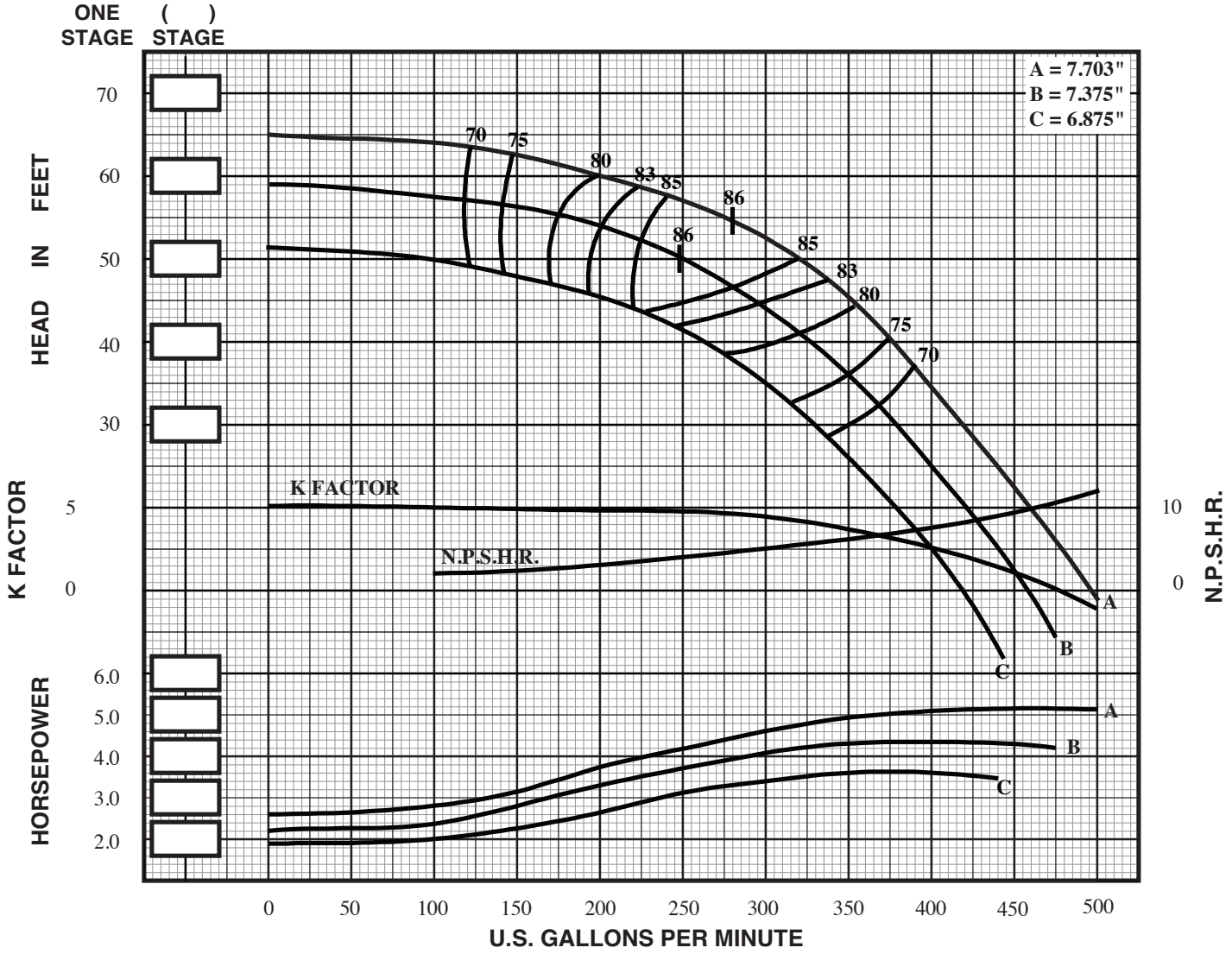

IMPELLER TYPE	= ENCLOSED	STD. SHAFT DIA.	= 1.500"	NO. STAGES	EFF. CHANGE	MATERIAL	B.E.P. EFF. CHANGE
IMPELLER NO.	= SP9L	MAX. SHAFT DIA.	= 1.500"				
IMPELLER WT. - LBS.	= 9.0	STD. LATERAL	= 1.19"	1	-3	IMP. - C.I.	-2
ONE STAGE WT. - LBS.	= 150.0	DISCHARGE SIZES	= 6" / 8"	2	-2	IMP. - NI-RI	-2
ADD'L STAGE WT. - LBS.	= 60.0	SUCTION SIZES	= 6" / BELL	3	-1	IMP. - S.S.	-3
MAX. SPHERE SIZE	= .53"	ONE STAGE WR^2	= .286	4	0	BOWL - BRZ.	-2
MIN. SUBMERGENCE*	= 15"		=	5	0	BOWL - NI-RI	-1
Δ CONSULT FACTORY			v18.2			BOWL - S.S.	-3

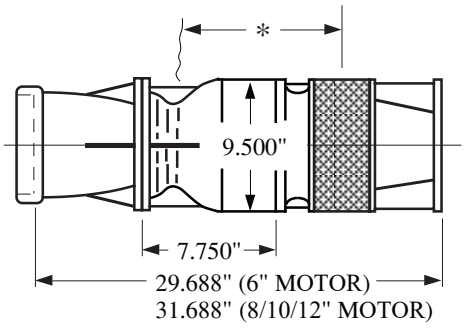

SUBMERSIBLE TURBINE

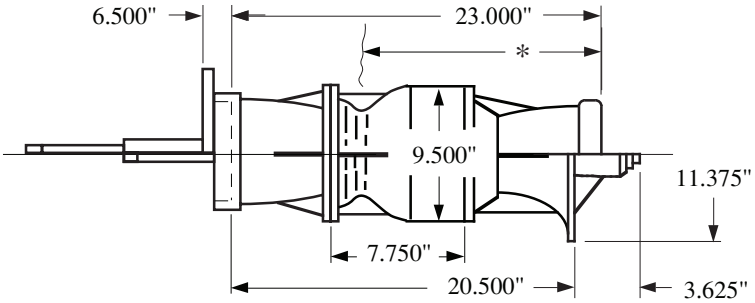

LINESHAFT TURBINE

SIMFLO®

Section 202
Date 7/1/11

SP9M

1770 RPM

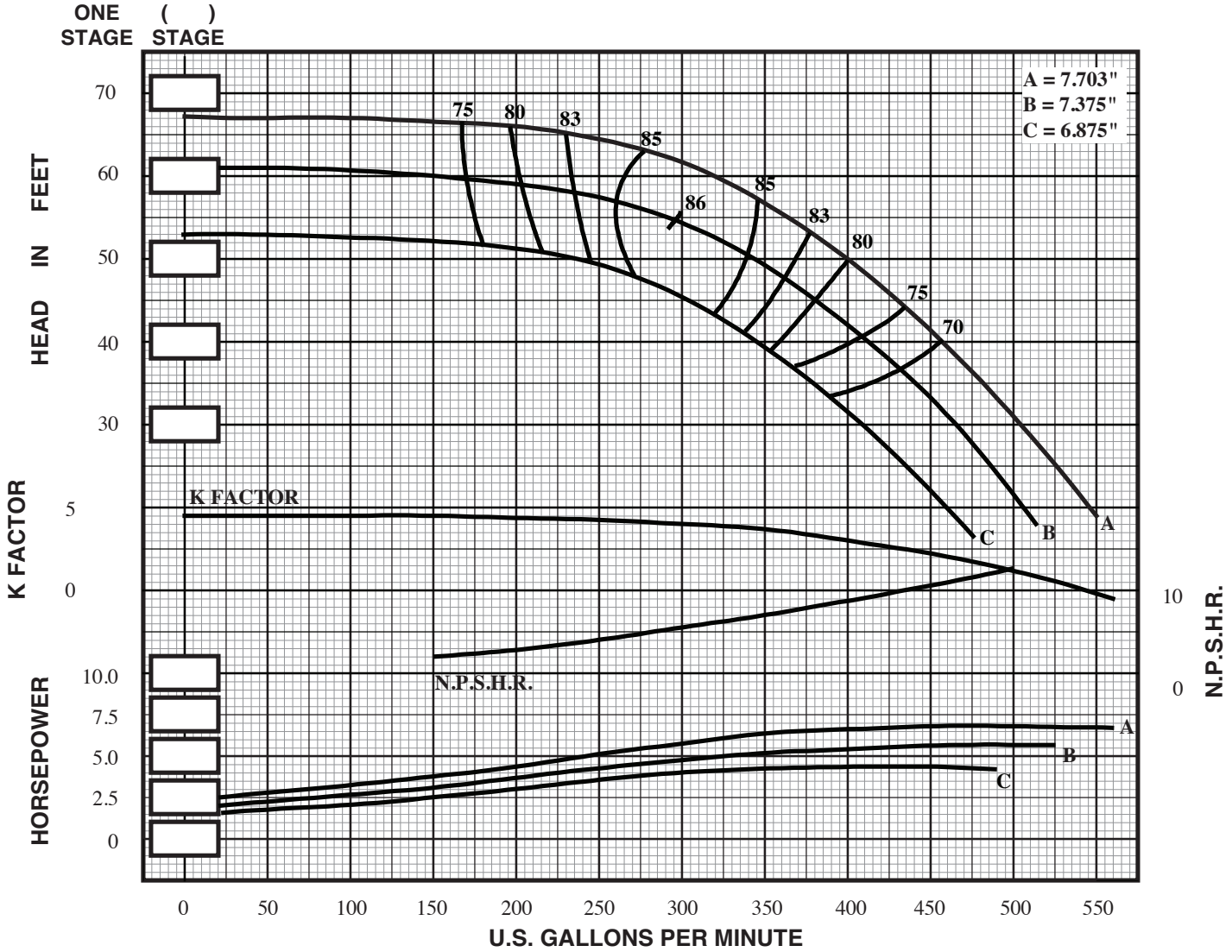

IMPELLER TYPE	= ENCLOSED	STD. SHAFT DIA.	= 1.500"	NO. STAGES	EFF. CHANGE	MATERIAL	B.E.P. EFF. CHANGE
IMPELLER NO.	= SP9M	MAX. SHAFT DIA.	= 1.500"				
IMPELLER WT. - LBS.	= 9.5	STD. LATERAL	= 1.19"	1	-3	IMP. - C.I.	-2
ONE STAGE WT. - LBS.	= 150.0	DISCHARGE SIZES	= 6" / 8"	2	-2	IMP. - NI-RI	-2
ADD'L STAGE WT. - LBS.	= 60.0	SUCTION SIZES	= 6" / BELL	3	-1	IMP. - S.S.	-3
MAX. SPHERE SIZE	= .53"	ONE STAGE WR^2	= .303	4	0	BOWL - BRZ.	-2
MIN. SUBMERGENCE*	= 15"		=	5	0	BOWL - NI-RI	-1
Δ CONSULT FACTORY			v18.2			BOWL - S.S.	-3

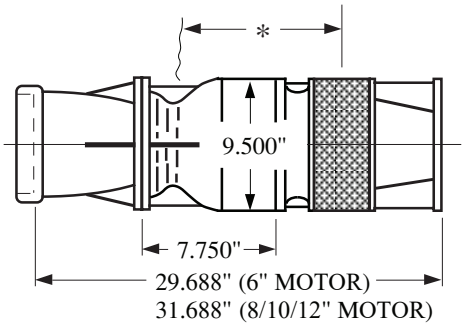

SUBMERSIBLE TURBINE

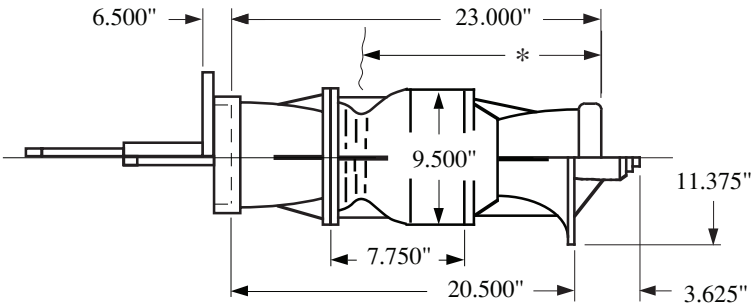

LINESHAFT TURBINE

SIMFLO®

Section 202
Date 9/1/06

SM9L

1770 RPM

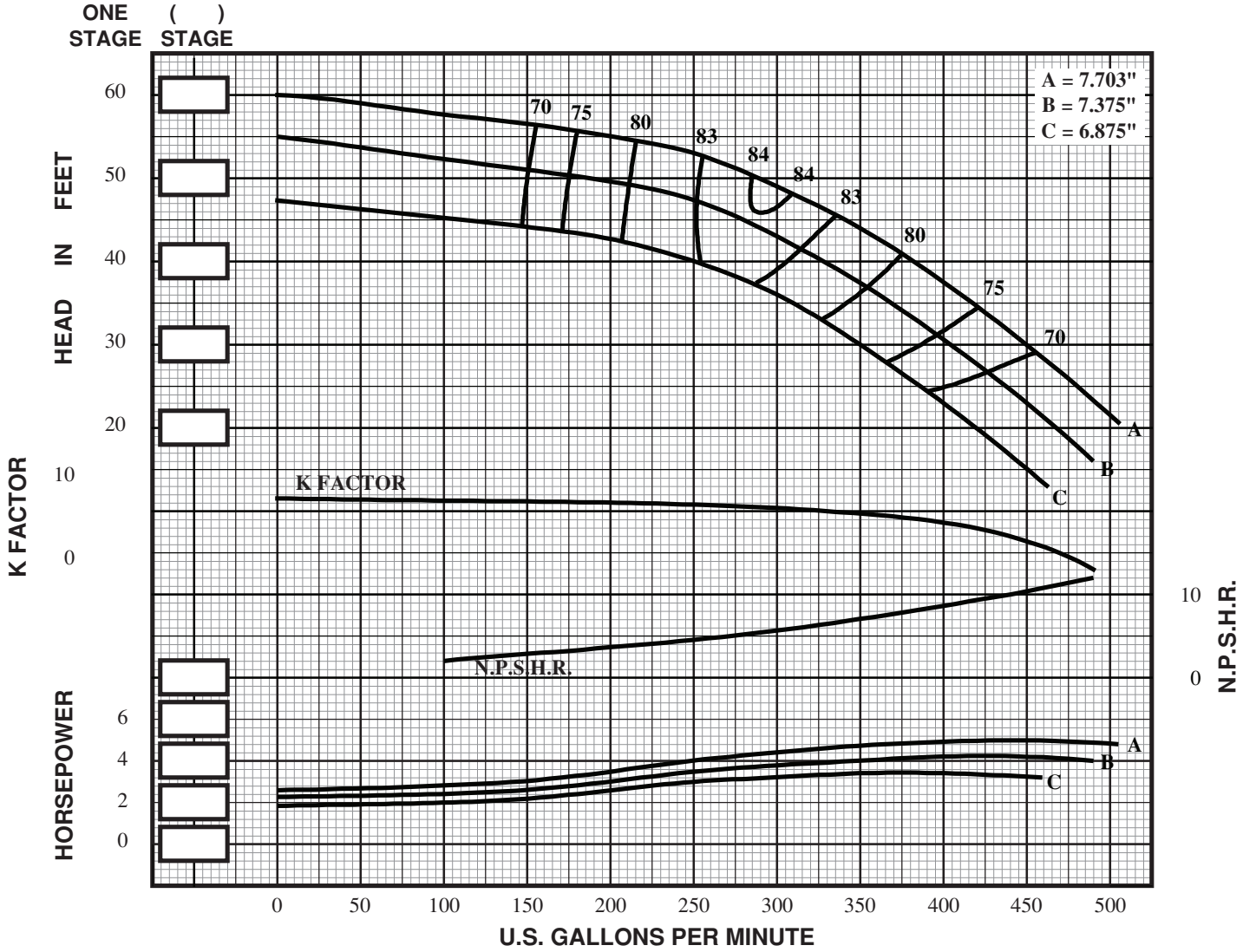

IMPELLER TYPE	= ENCLOSED	STD. SHAFT DIA.	= 1.500"	NO. STAGES	EFF. CHANGE	MATERIAL	B.E.P. EFF. CHANGE
IMPELLER NO.	= SP9L	MAX. SHAFT DIA.	= 1.500"				
IMPELLER WT. - LBS.	= 9.0	STD. LATERAL	= 1.13"	1	-3	IMP. - C.I.	-2
ONE STAGE WT. - LBS.	= 150.0	DISCHARGE SIZES	= 6"/ 8"	2	-2	IMP. - NI-RI	-2
ADD'L STAGE WT. - LBS.	= 60.0	SUCTION SIZES	= 6" / BELL	3	-1	IMP. - S.S.	-3
MAX. SPHERE SIZE	= .53"	ONE STAGE WR^2	= .286	4	0	BOWL - BRZ.	-2
MIN. SUBMERGENCE *	= 15"		=	5	0	BOWL - NI-RI	-1
						BOWL - S.S.	-3

Δ CONSULT FACTORY

v18.2

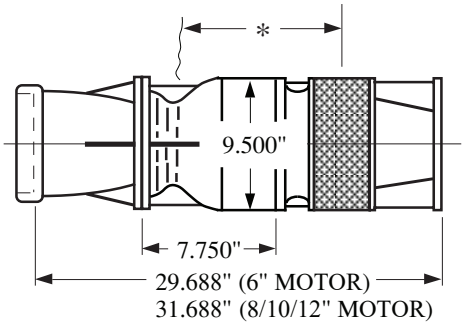

SUBMERSIBLE TURBINE

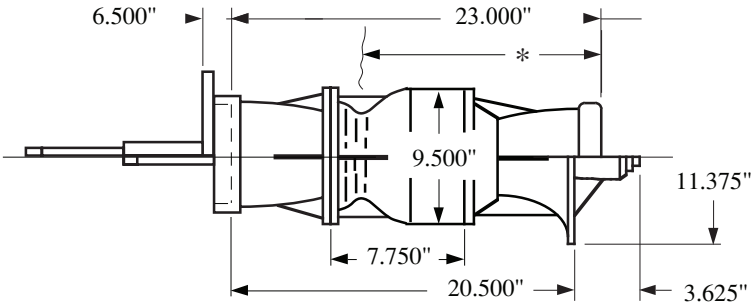

LINESHAFT TURBINE

SIMFLO®

Section 202
Date 9/1/06

SM9M

1770 RPM

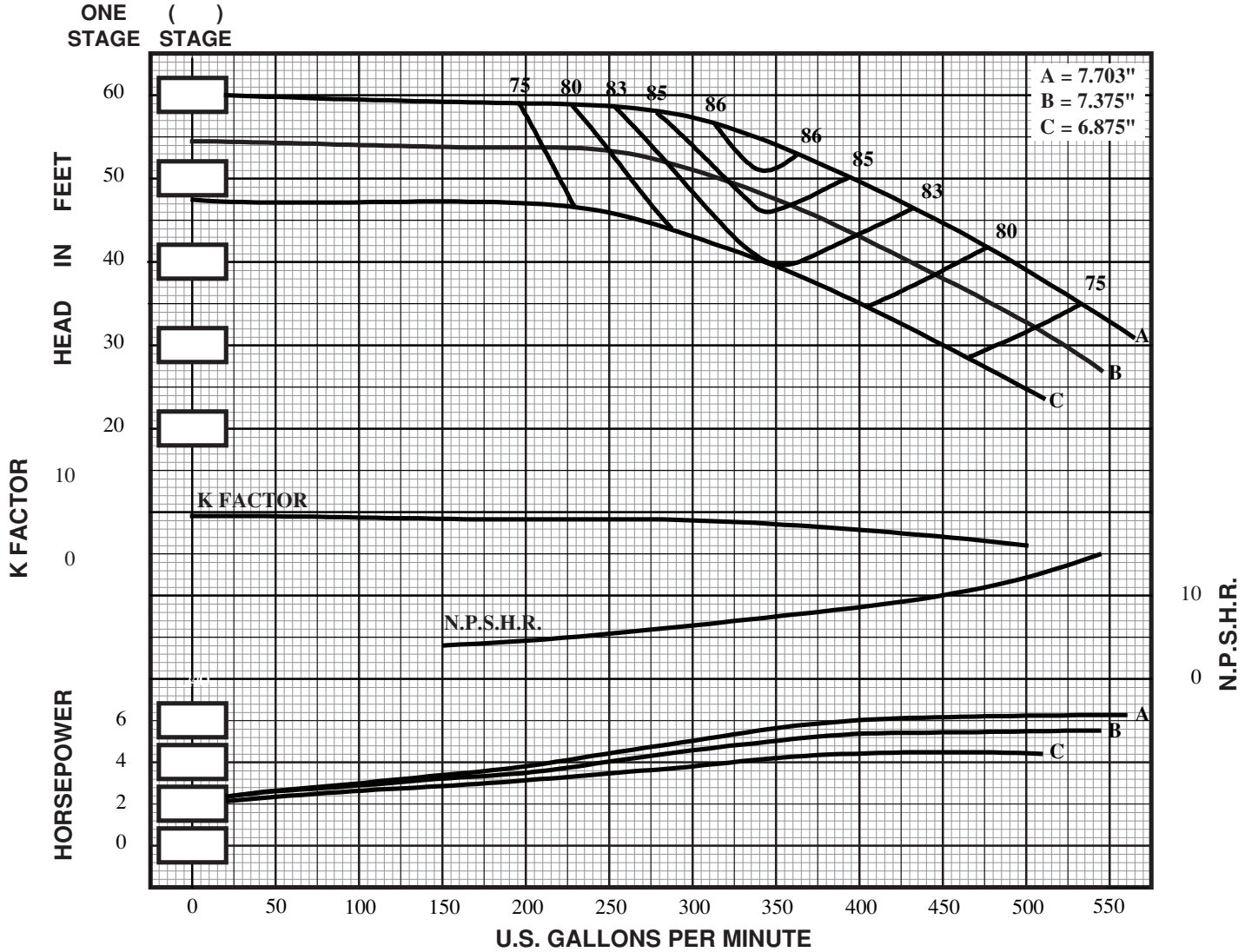

IMPELLER TYPE	= ENCLOSED	STD. SHAFT DIA.	= 1.500"	NO. STAGES	EFF. CHANGE	MATERIAL	B.E.P. EFF. CHANGE
IMPELLER NO.	= SP9M	MAX. SHAFT DIA.	= 1.500"				
IMPELLER WT. - LBS.	= 9.5	STD. LATERAL	= 1.13"	1	-3	IMP. - C.I.	-2
ONE STAGE WT. - LBS.	= 150.0	DISCHARGE SIZES	= 6"/ 8"	2	-2	IMP. - NI-RI	-2
ADD'L STAGE WT. - LBS.	= 60.0	SUCTION SIZES	= 6"/ BELL	3	-1	IMP. - S.S.	-3
MAX. SPHERE SIZE	= .53"	ONE STAGE WR^2	= .303	4	0	BOWL - BRZ.	-2
MIN. SUBMERGENCE*	= 15"		=	5	0	BOWL - NI-RI	-1
Δ CONSULT FACTORY					v18.2	BOWL - S.S.	-3

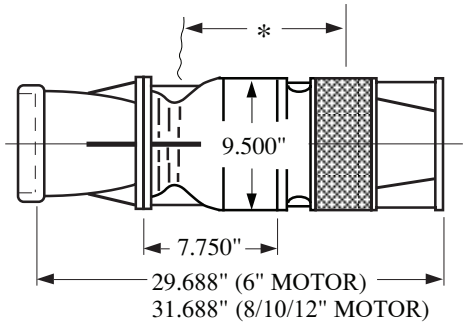

SUBMERSIBLE TURBINE

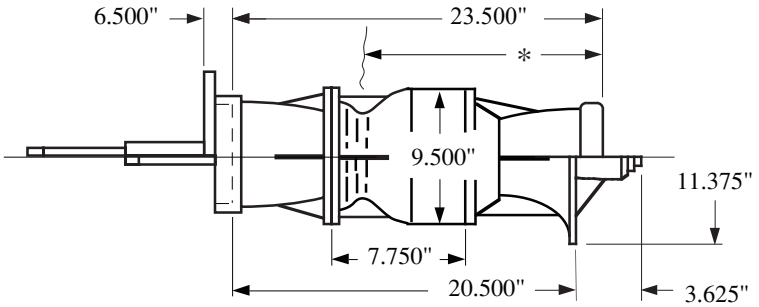

LINESHAFT TURBINE

SIMFLO®

Section 202
Date 9/1/06

SL9H

1770 RPM

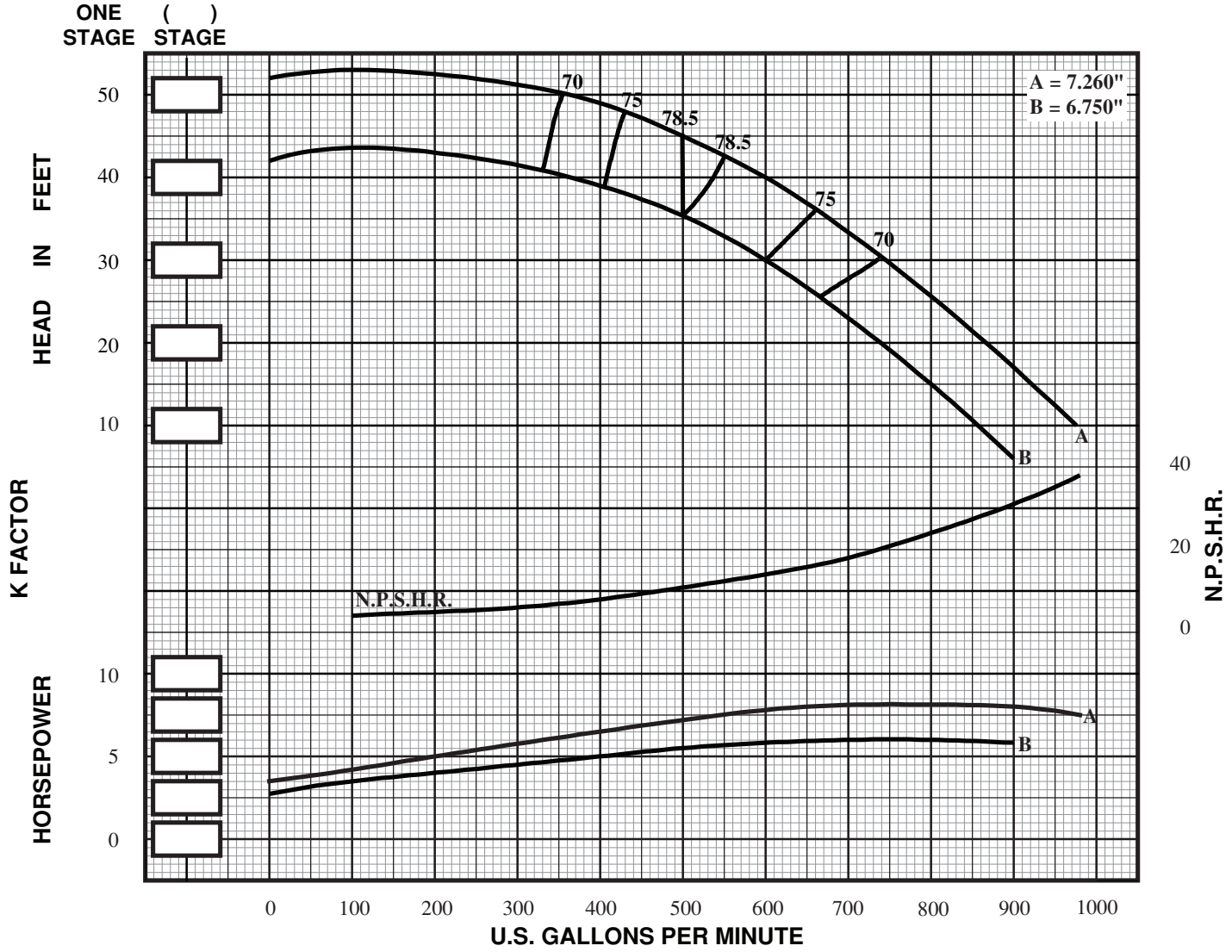

IMPELLER TYPE	= ENCLOSED	STD. SHAFT DIA.	= 1.500"	NO. STAGES	EFF. CHANGE	MATERIAL	B.E.P. EFF. CHANGE
IMPELLER NO.	= SL9H	MAX. SHAFT DIA.	= 1.500"				
IMPELLER WT. - LBS.	= 8.7	STD. LATERAL	= .94"	1	-3	IMP. - C.I.	-2
ONE STAGE WT. - LBS.	= 135.0	DISCHARGE SIZES	= 6"/ 8"	2	-2	IMP. - NI-RI	-2
ADD'L STAGE WT. - LBS.	= 53.0	SUCTION SIZES	= 6"/ BELL	3	-1	IMP. - S.S.	-3
MAX. SPHERE SIZE	= .88"	ONE STAGE WR^2	= .248	4	0	BOWL - BRZ.	-2
MIN. SUBMERGENCE*	= 15"	K-FACTOR, MAX.	= 5.70	5	0	BOWL - NI-RI	-2
						BOWL - S.S.	-3

Δ CONSULT FACTORY

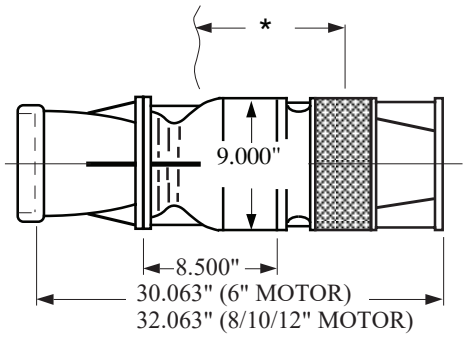

SUBMERSIBLE TURBINE

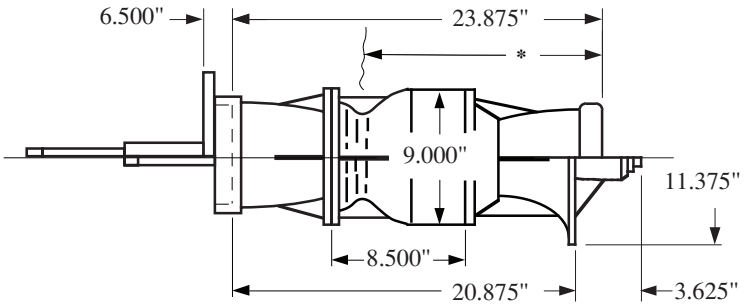

LINESHAFT TURBINE

SIMFLO®

Section 202
Date 9/1/06

SF9H

1770 RPM

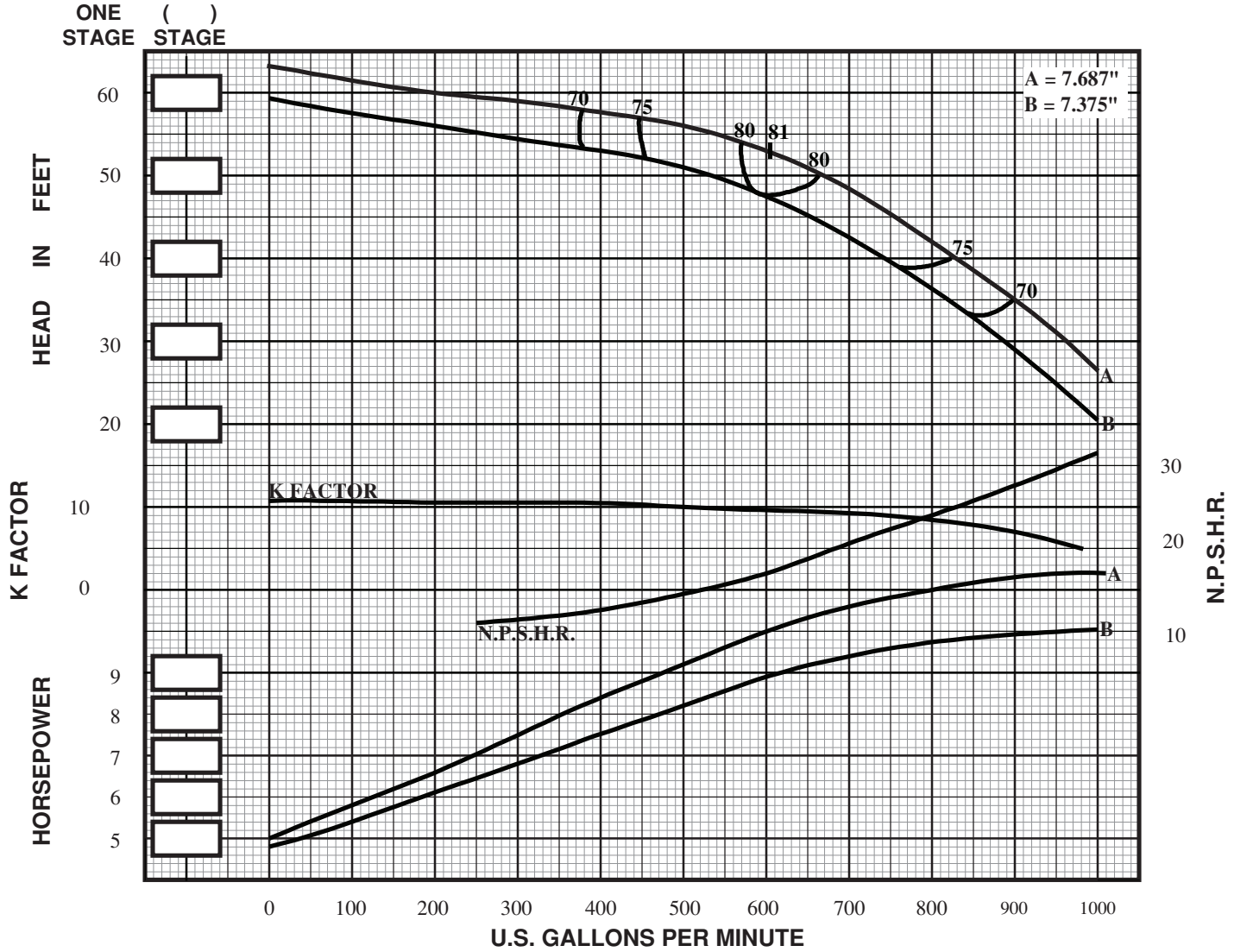

IMPELLER TYPE	= ENCLOSED	STD. SHAFT DIA.	= 1.500"	NO. STAGES	EFF. CHANGE	MATERIAL	B.E.P. EFF. CHANGE
IMPELLER NO.	= SF9H	MAX. SHAFT DIA.	= 1.500"				
IMPELLER WT. - LBS.	= 9.0	STD. LATERAL	= .94"	1	-3	IMP. - C.I.	-2
ONE STAGE WT. - LBS.	= 185.0	DISCHARGE SIZES	= 6"/ 8"	2	-2	IMP. - NI-RI	-2
ADD'L STAGE WT. - LBS.	= 67.0	SUCTION SIZES	= 6"	3	-1	IMP. - S.S.	-3
MAX. SPHERE SIZE	= .88"	ONE STAGE WR^2	= .291	4	0	BOWL - BRZ.	-2
MIN. SUBMERGENCE*	= 15"		=	5	0	BOWL - NI-RI	-2
Δ CONSULT FACTORY			v18.1			BOWL - S.S.	-3

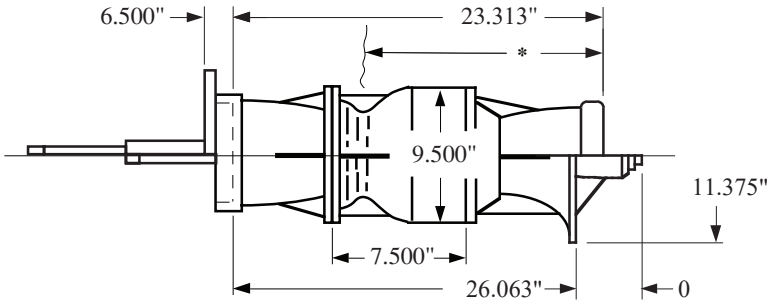

LINESHAFT TURBINE

SIMFLO®

Section 202
Date 9/1/06

SK9M

1770 RPM

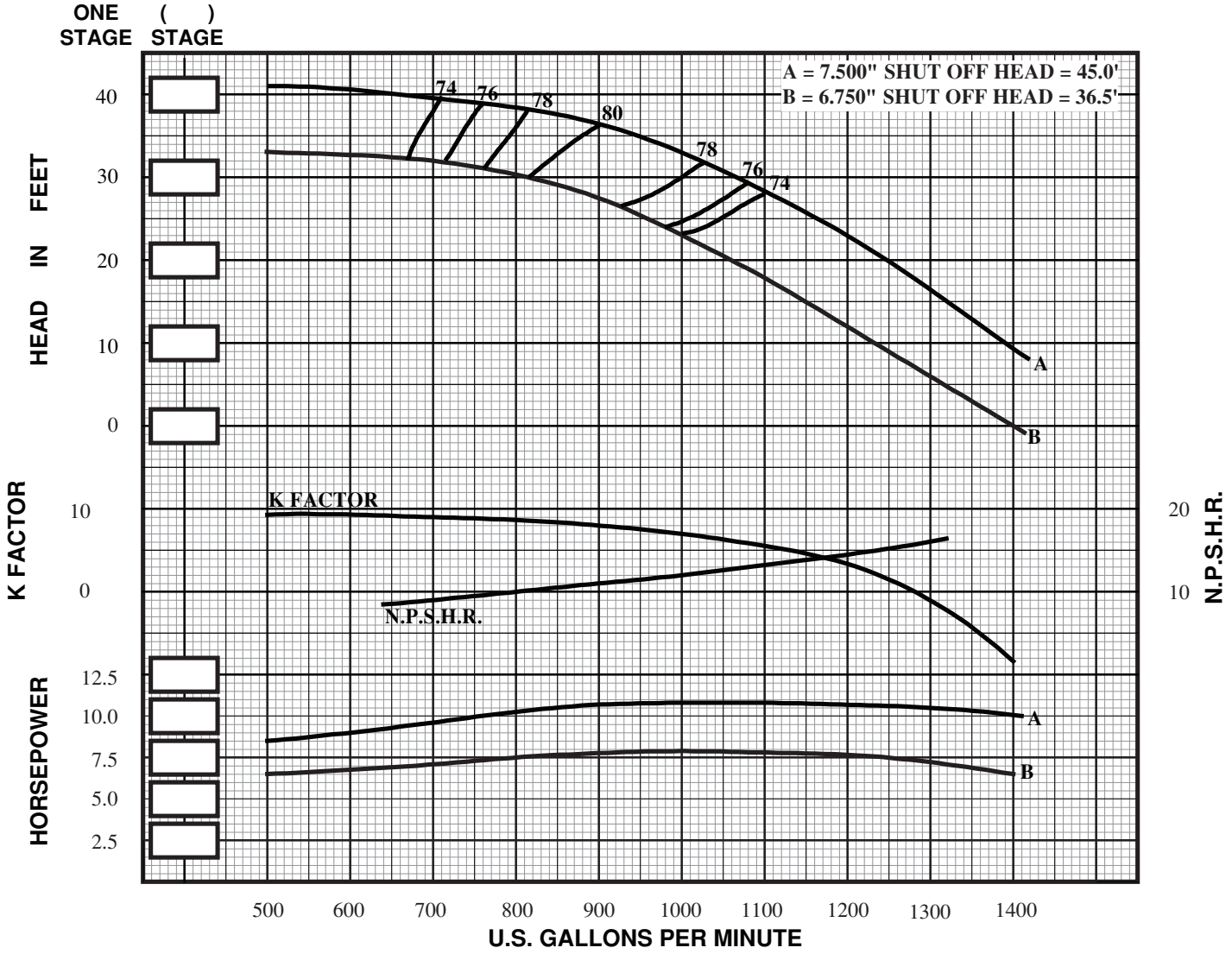

IMPELLER TYPE	= ENCLOSED	STD. SHAFT DIA.	= 1.688"	NO. STAGES	EFF. CHANGE	MATERIAL	B.E.P. EFF. CHANGE
IMPELLER NO.	= SK9M	MAX. SHAFT DIA.	= 1.688"				
IMPELLER WT. - LBS.	= 14.9	STD. LATERAL	= 1.44"	1	-4	IMP. - C.I.	-3
ONE STAGE WT. - LBS.	= 250.0	DISCHARGE SIZES	= 8"	2	-3	IMP. - NI-RI	-2
ADD'L STAGE WT. - LBS.	= 85.0	SUCTION SIZES	= 8"	3	-2	IMP. - S.S.	NOT RECOM.
MAX. SPHERE SIZE	= 1.13"	ONE STAGE WR^2	= .462	4	-1	BOWL - BRZ.	-2
MIN. SUBMERGENCE*	= 18"		=	5	0	BOWL - NI-RI	-1
Δ CONSULT FACTORY			v18.1			BOWL - S.S.	-3

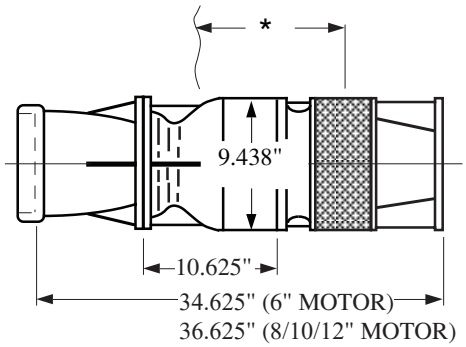

SUBMERSIBLE TURBINE

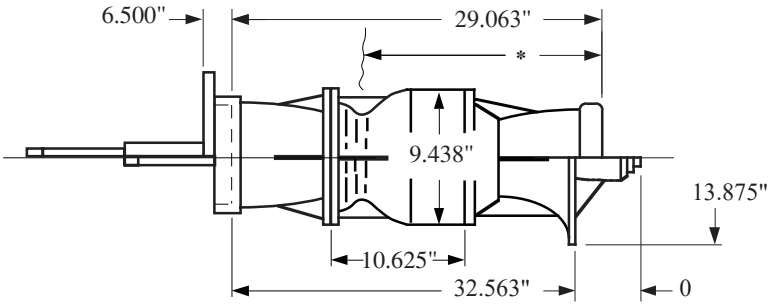

LINESHAFT TURBINE

SIMFLO®

Section 202
Date 3/30/18

SK9H

1770 RPM

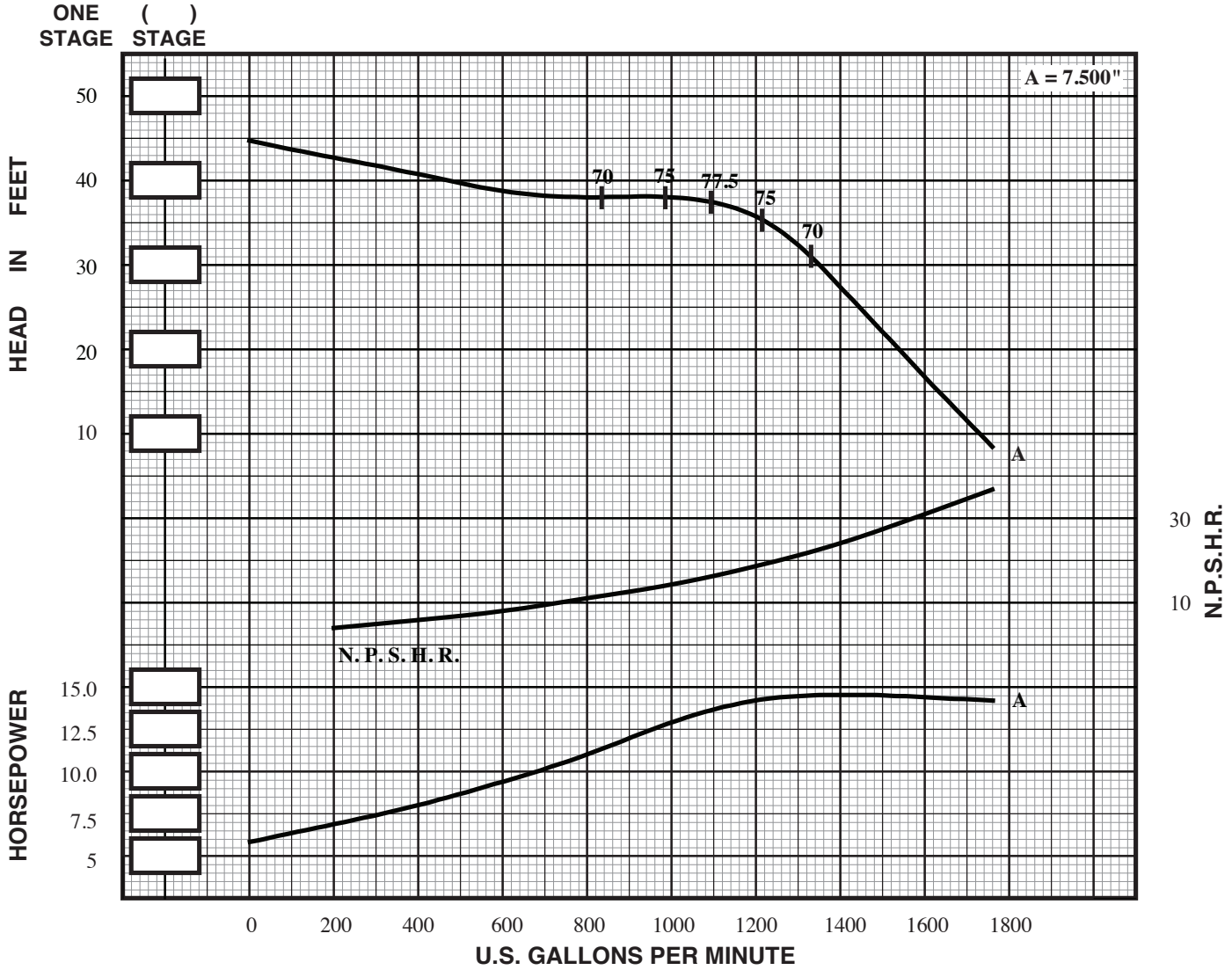

IMPELLER TYPE = ENCLOSED	STD. SHAFT DIA. = 1.688"	NO. STAGES	EFF. CHANGE	MATERIAL	B.E.P. EFF. CHANGE
IMPELLER NO. = SK9H	MAX. SHAFT DIA. = 1.688"				
IMPELLER WT. - LBS. = 13.1	STD. LATERAL = 1.00"	1	-3	IMP. - C.I.	-3
ONE STAGE WT. - LBS. = 250.0	DISCHARGE SIZES = 8"	2	-2	IMP. - NI-RI	-2
ADD'L STAGE WT. - LBS. = 85.0	SUCTION SIZES = 8"	3	-1	IMP. - S.S.	NOT RECOM.
MAX. SPHERE SIZE = 1.13"	ONE STAGE WR^2 = .421	4	-1	BOWL - BRZ.	-2
MIN. SUBMERGENCE* = 18"	K-FACTOR, MAX. = 9.9	5	0	BOWL - NI-RI	-1
Δ CONSULT FACTORY	v18.1			BOWL - S.S.	-3

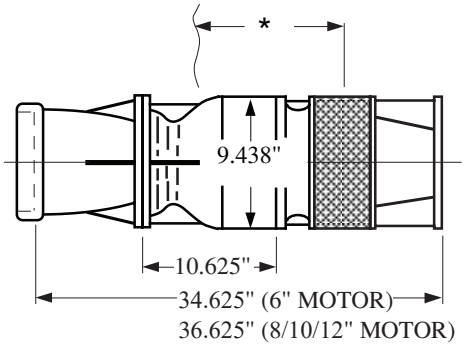

SUBMERSIBLE TURBINE

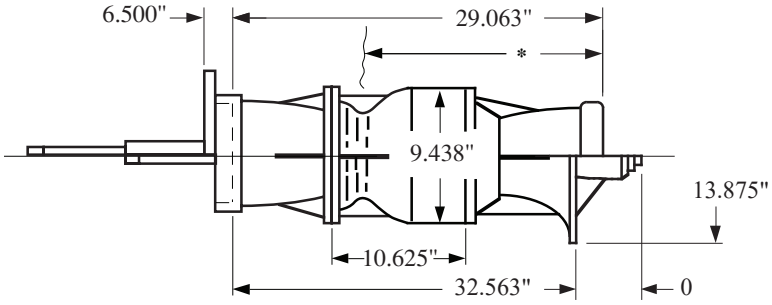

LINESHAFT TURBINE

SIMFLO®

SP10L

1770 RPM

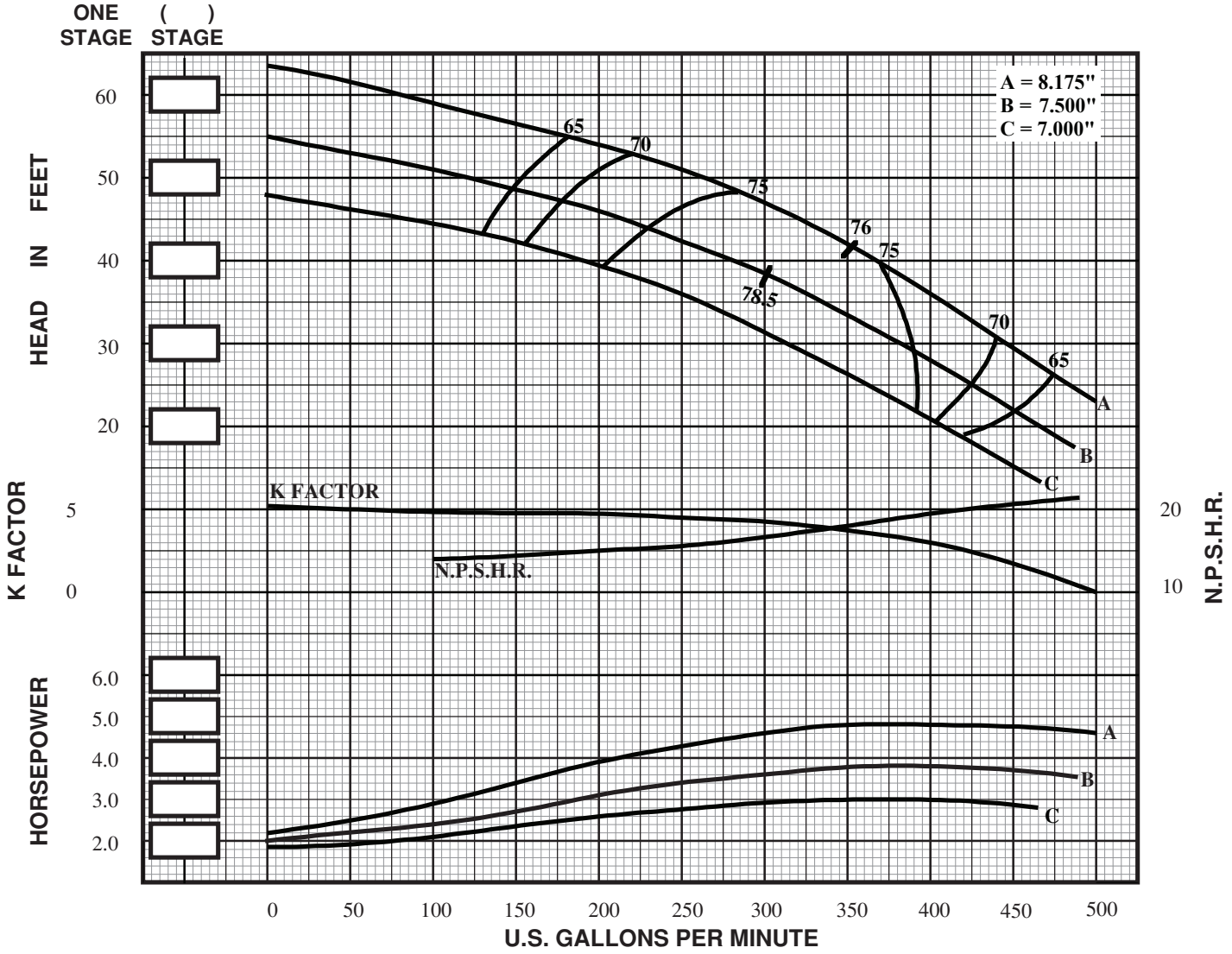

IMPELLER TYPE	= ENCLOSED	STD. SHAFT DIA.	= 1.500"	NO. STAGES	EFF. CHANGE	MATERIAL	B.E.P. EFF. CHANGE
IMPELLER NO.	= SP10L	MAX. SHAFT DIA.	= 1.500"				
IMPELLER WT. - LBS.	= 8.1	STD. LATERAL	= .94"	1	-4	IMP. - C.I.	-3
ONE STAGE WT. - LBS.	= 190.0	DISCHARGE SIZES	= 6"/ 8"	2	-3	IMP. - NI-RI	-2
ADD'L STAGE WT. - LBS.	= 75.0	SUCTION SIZES	= 6"/ BELL	3	-2	IMP. - S.S.	-3
MAX. SPHERE SIZE	= .50"	ONE STAGE WR^2	= .295	4	-1	BOWL - BRZ.	-2
MIN. SUBMERGENCE*	= 14"		=	5	0	BOWL - NI-RI	-1
Δ CONSULT FACTORY			v18.1			BOWL - S.S.	-3

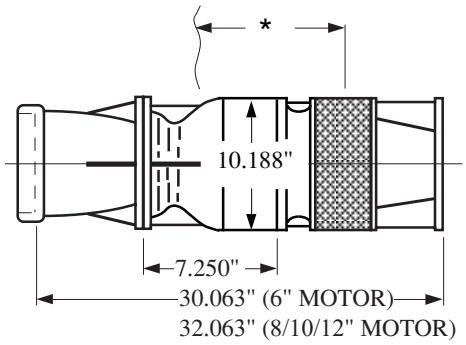

SUBMERSIBLE TURBINE

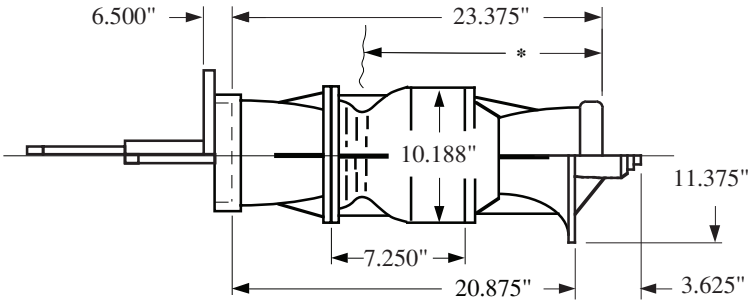

LINESHAFT TURBINE

SIMFLO®

Section 202
Date 9/1/06

SP10M

1770 RPM

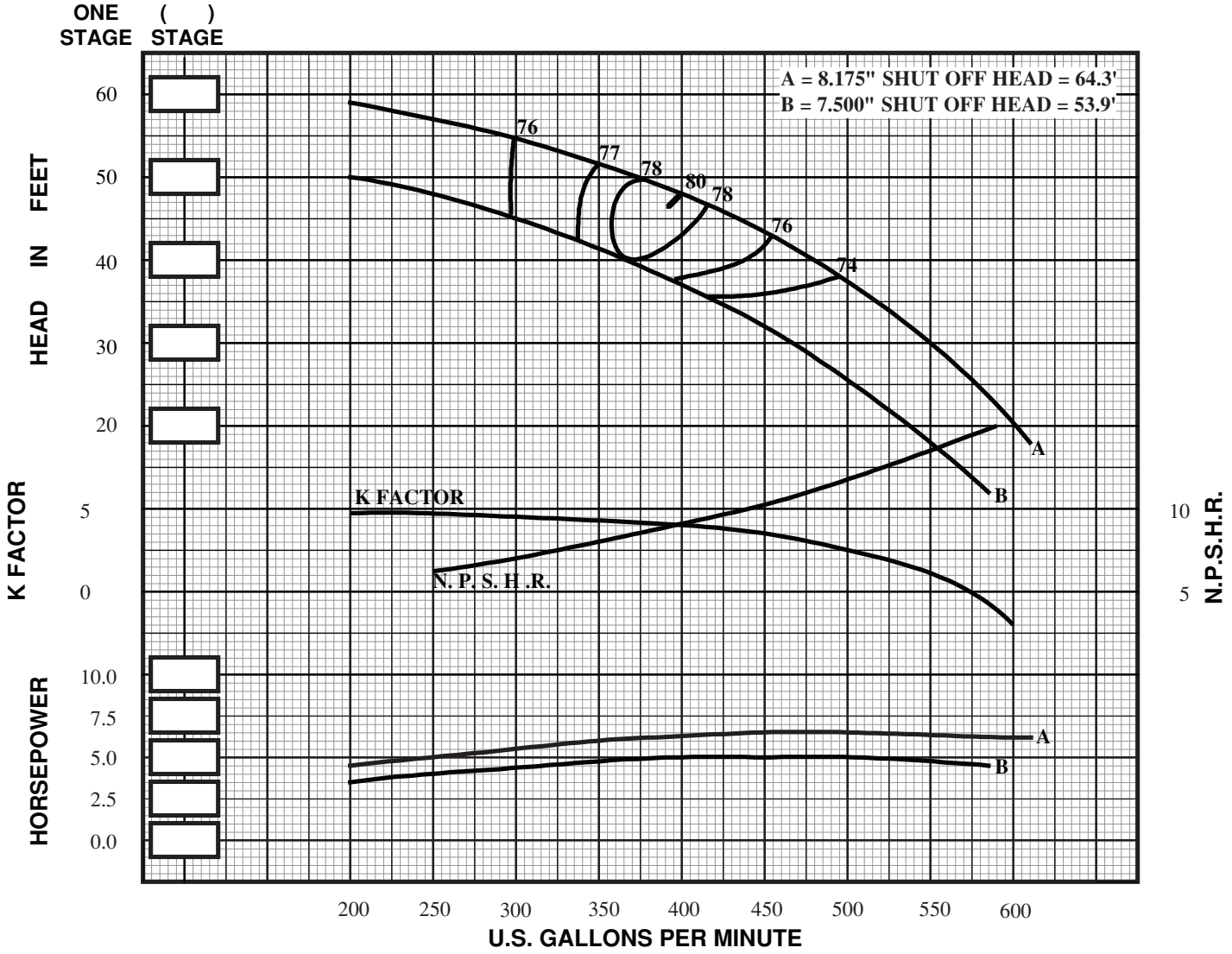

IMPELLER TYPE	= ENCLOSED	STD. SHAFT DIA.	= 1.500"	NO. STAGES	EFF. CHANGE	MATERIAL	B.E.P. EFF. CHANGE
IMPELLER NO.	= SP10M	MAX. SHAFT DIA.	= 1.500"				
IMPELLER WT. - LBS.	= 8.9	STD. LATERAL	= .94"	1	-3	IMP. - C.I.	-3
ONE STAGE WT. - LBS.	= 190.0	DISCHARGE SIZES	= 6"/ 8"	2	-2	IMP. - NI-RI	-2
ADD'L STAGE WT. - LBS.	= 75.0	SUCTION SIZES	= 6"/ BELL	3	-1	IMP. - S.S.	-3
MAX. SPHERE SIZE	= .50"	ONE STAGE WR^2	= .324	4	0	BOWL - BRZ.	-2
MIN. SUBMERGENCE*	= 14"		=	5	0	BOWL - NI-RI	-1
Δ CONSULT FACTORY			v18.1			BOWL - S.S.	-3

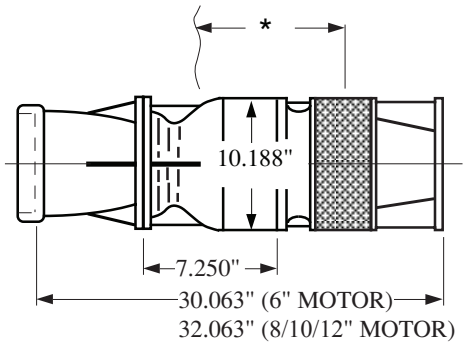

SUBMERSIBLE TURBINE

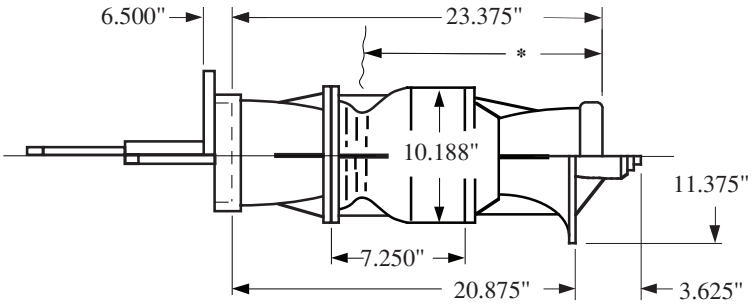

LINESHAFT TURBINE

SIMFLO®

Section 202
Date 12/10/08

SP10H

1770 RPM

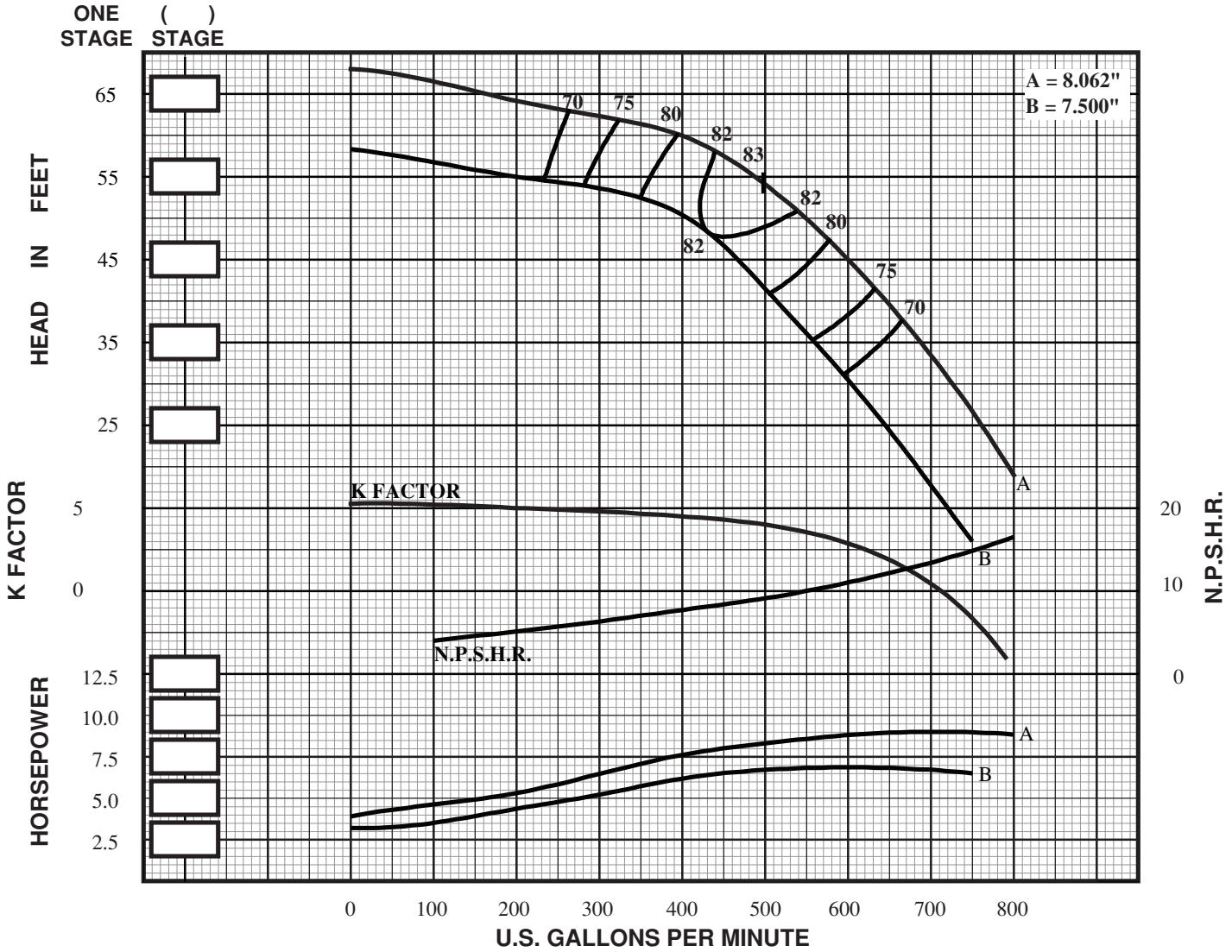

IMPELLER TYPE	= ENCLOSED	STD. SHAFT DIA.	= 1.500"	NO. STAGES	EFF. CHANGE	MATERIAL	B.E.P. EFF. CHANGE
IMPELLER NO.	= SP10H	MAX. SHAFT DIA.	= 1.500"				
IMPELLER WT. - LBS.	= 9.0	STD. LATERAL	= .63"	1	-4	IMP. - C.I.	-3
ONE STAGE WT. - LBS.	= 190.0	DISCHARGE SIZES	= 6"/ 8"	2	-3	IMP. - NI-RI	-2
ADD'L STAGE WT. - LBS.	= 75.0	SUCTION SIZES	= 6"/ BELL	3	-2	IMP. - S.S.	-2
MAX. SPHERE SIZE	= .63"	ONE STAGE WR^2	= .315	4	-1	BOWL - BRZ.	-3
MIN. SUBMERGENCE*	= 14"		=	5	0	BOWL - NI-RI	-1
Δ CONSULT FACTORY			v18.1			BOWL - S.S.	-3

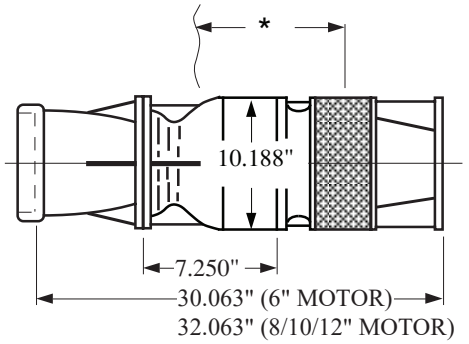

SUBMERSIBLE TURBINE

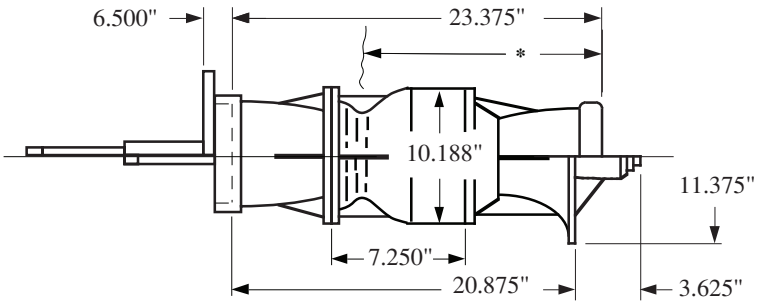

LINESHAFT TURBINE

SIMFLO®

Section 202
Date 3/30/18

SM10MO

1770 RPM

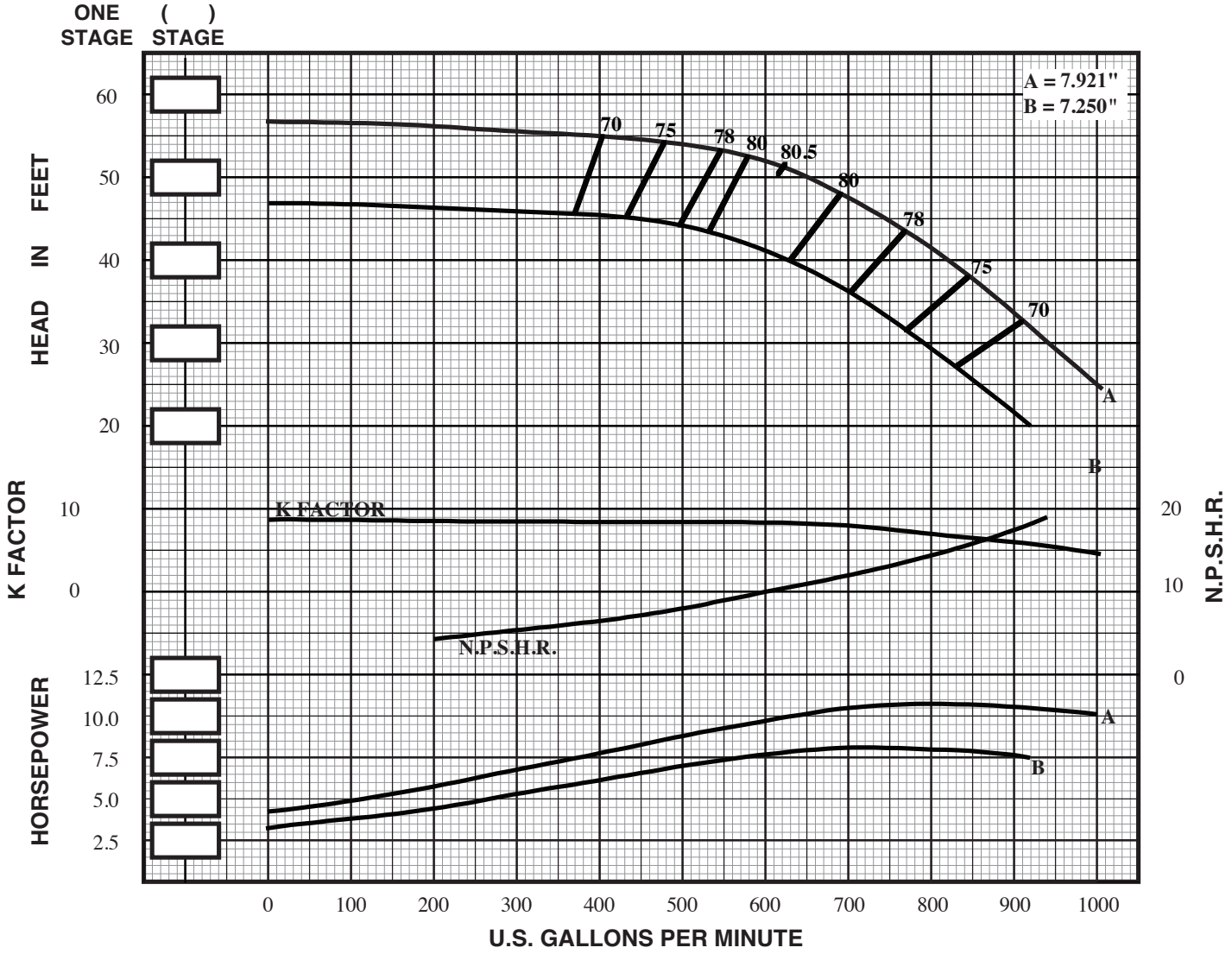

IMPELLER TYPE	= SEMI-OPEN	STD. SHAFT DIA.	= 1.500"	NO. STAGES	EFF. CHANGE	MATERIAL	B.E.P. EFF. CHANGE
IMPELLER NO.	= SM10MO	MAX. SHAFT DIA.	= 1.500"				
IMPELLER WT. - LBS.	= 6.1	STD. LATERAL	= 1.00"	1	-4	IMP. - C.I.	-4
ONE STAGE WT. - LBS.	= 190.0	DISCHARGE SIZES	= 6" / 8"	2	-3	IMP. - NI-RI	-2
ADD'L STAGE WT. - LBS.	= 75.0	SUCTION SIZES	= 6" / BELL	3	-2	IMP. - S.S.	NOT RECOM.
MAX. SPHERE SIZE	= .81"	ONE STAGE WR^2	= .217	4	-1	BOWL - BRZ.	-2
MIN. SUBMERGENCE*	= 16"		=	5	0	BOWL - NI-RI	-1
Δ CONSULT FACTORY			v18.1			BOWL - S.S.	-3

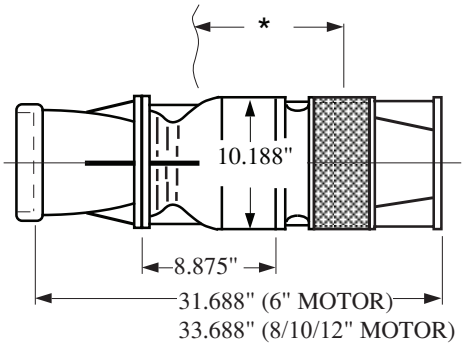

SUBMERSIBLE TURBINE

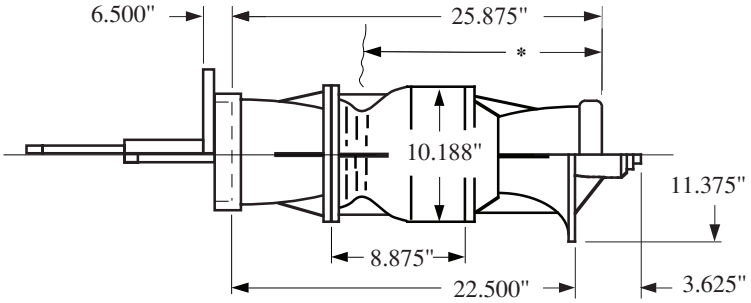

LINESHAFT TURBINE

SIMFLO®

Section 202
Date 3/30/18

SM10HO

1770 RPM

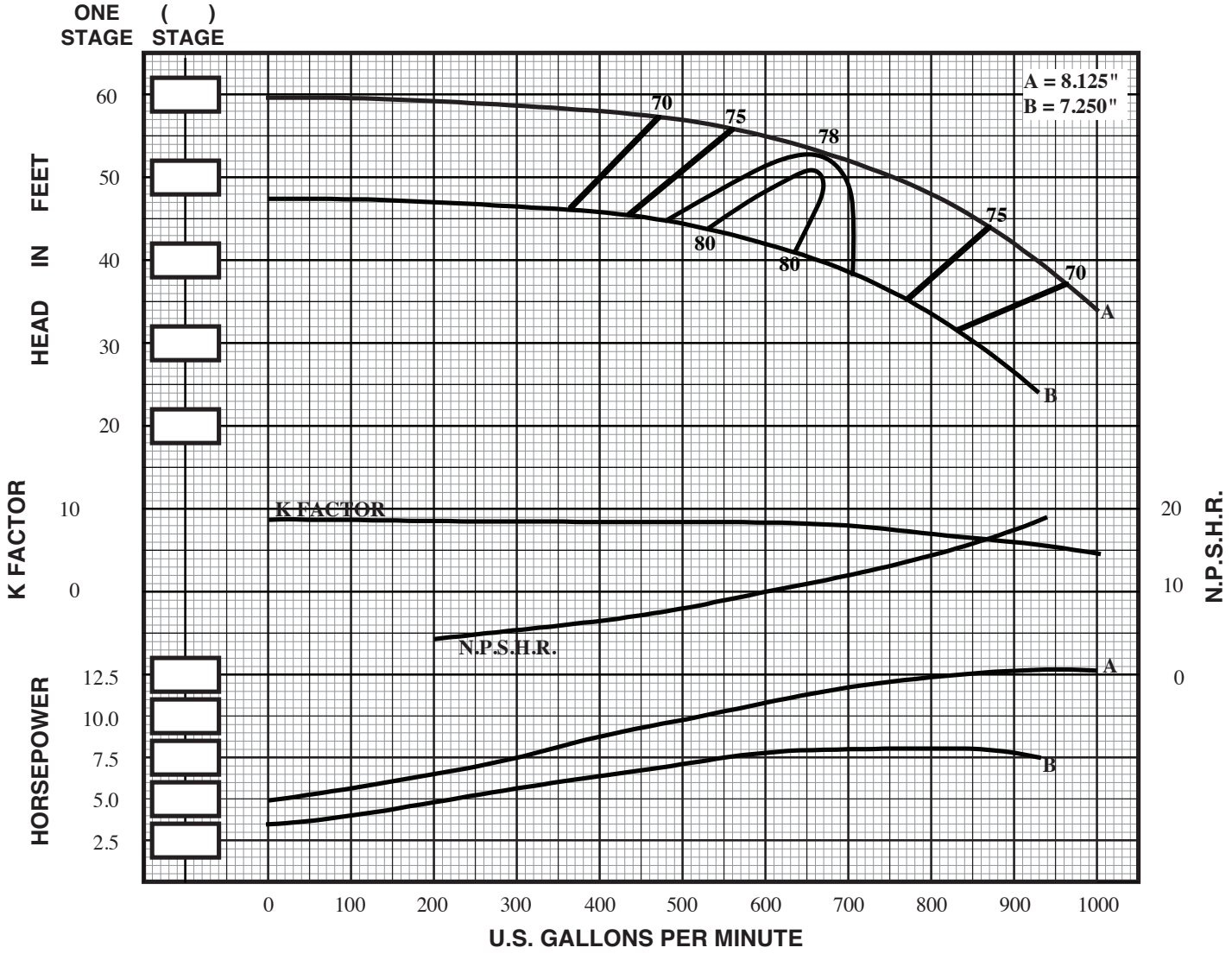

IMPELLER TYPE	= SEMI-OPEN	STD. SHAFT DIA.	= 1.500"	NO. STAGES	EFF. CHANGE	MATERIAL	B.E.P. EFF. CHANGE
IMPELLER NO.	= SM10HO	MAX. SHAFT DIA.	= 1.500"				
IMPELLER WT. - LBS.	= 6.1	STD. LATERAL	= 1.31"	1	-4	IMP. - C.I.	-4
ONE STAGE WT. - LBS.	= 190.0	DISCHARGE SIZES	= 6" / 8"	2	-3	IMP. - NI-RI	-2
ADD'L STAGE WT. - LBS.	= 75.0	SUCTION SIZES	= 6" / BELL	3	-2	IMP. - S.S.	NOT RECOM.
MAX. SPHERE SIZE	= .81"	ONE STAGE WR^2	= .217	4	-1	BOWL - BRZ.	-2
MIN. SUBMERGENCE*	= 16"		=	5	0	BOWL - NI-RI	-1
Δ CONSULT FACTORY			v18.1			BOWL - S.S.	-3

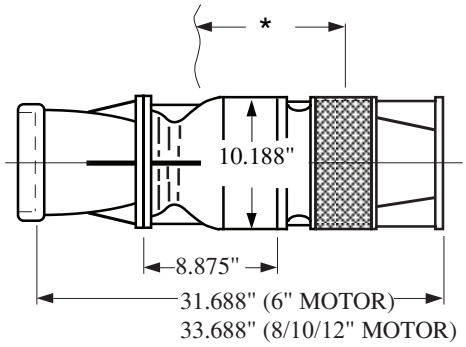

SUBMERSIBLE TURBINE

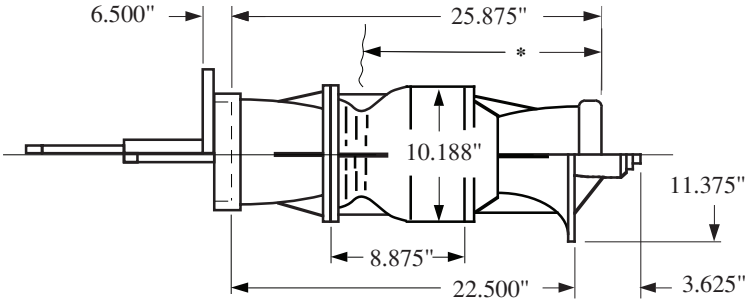

LINESHAFT TURBINE

SIMFLO®

Section 202
Date 9/1/06

SM10M

1770 RPM

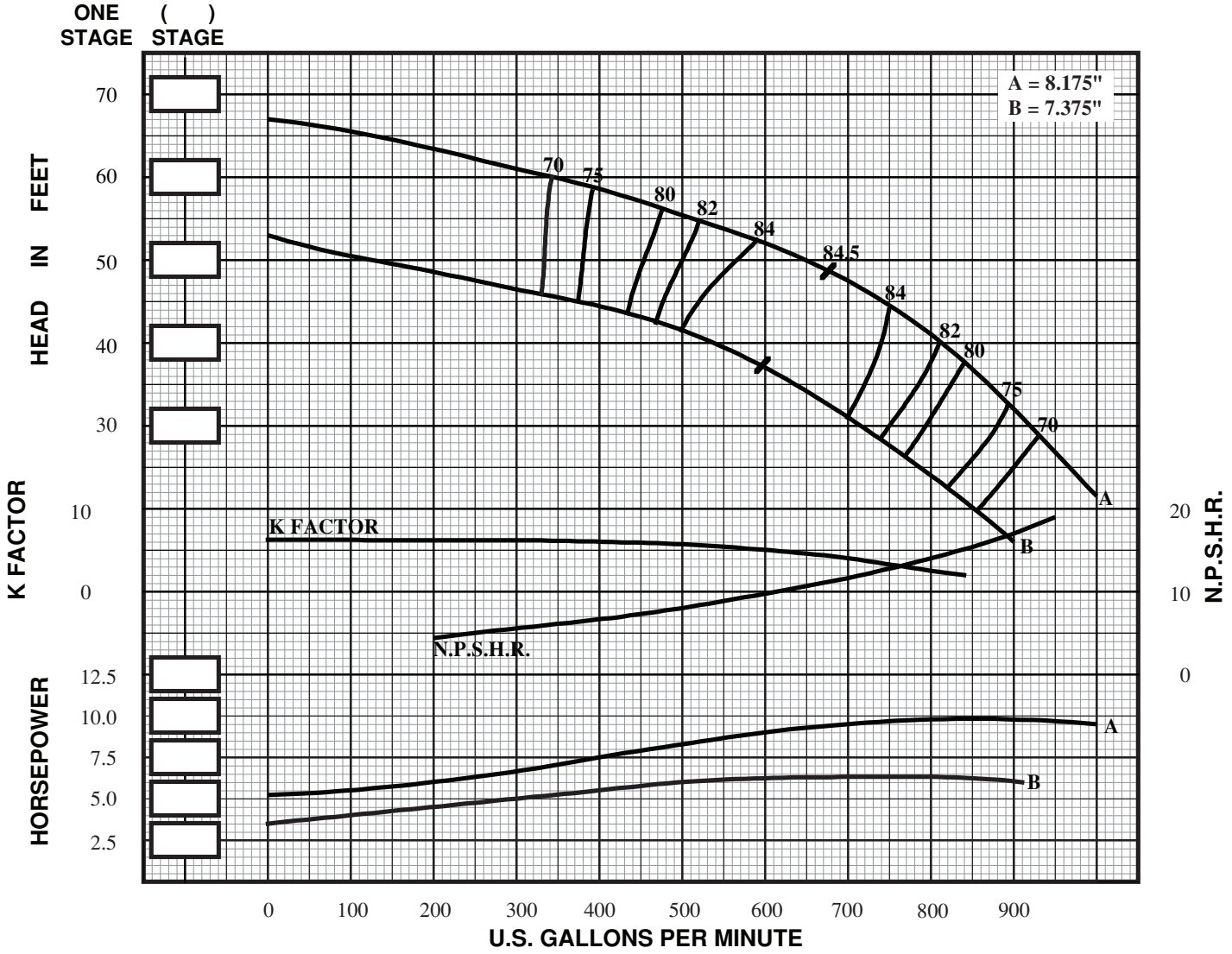

IMPELLER TYPE	= ENCLOSED	STD. SHAFT DIA.	= 1.500"	NO. STAGES	EFF. CHANGE	MATERIAL	B.E.P. EFF. CHANGE
IMPELLER NO.	= SM10M	MAX. SHAFT DIA.	= 1.500"				
IMPELLER WT. - LBS.	= 9.7	STD. LATERAL	= .81"	1	-4	IMP. - C.I.	-3
ONE STAGE WT. - LBS.	= 195.0	DISCHARGE SIZES	= 6"/ 8"	2	-3	IMP. - NI-RI	-2
ADD'L STAGE WT. - LBS.	= 75.0	SUCTION SIZES	= 6"/ BELL	3	-2	IMP. - S.S.	-4
MAX. SPHERE SIZE	= .88"	ONE STAGE WR^2	= .347	4	-1	BOWL - BRZ.	-2
MIN. SUBMERGENCE*	= 16"		=	5	0	BOWL - NI-RI	-1
						BOWL - S.S.	-2

Δ CONSULT FACTORY

v18.1

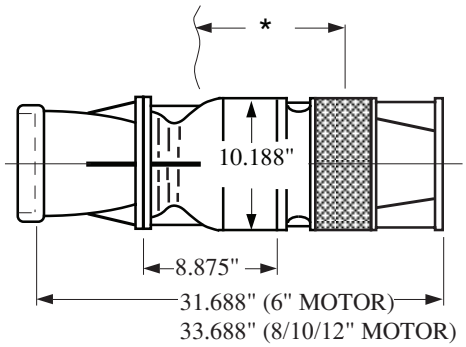

SUBMERSIBLE TURBINE

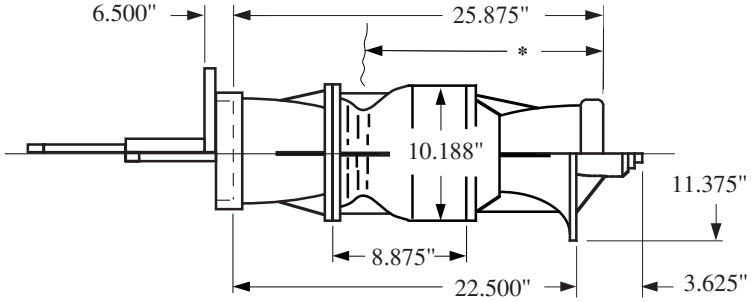

LINESHAFT TURBINE

SIMFLO®

Section 202
Date 9/1/06

SM10H

1770 RPM

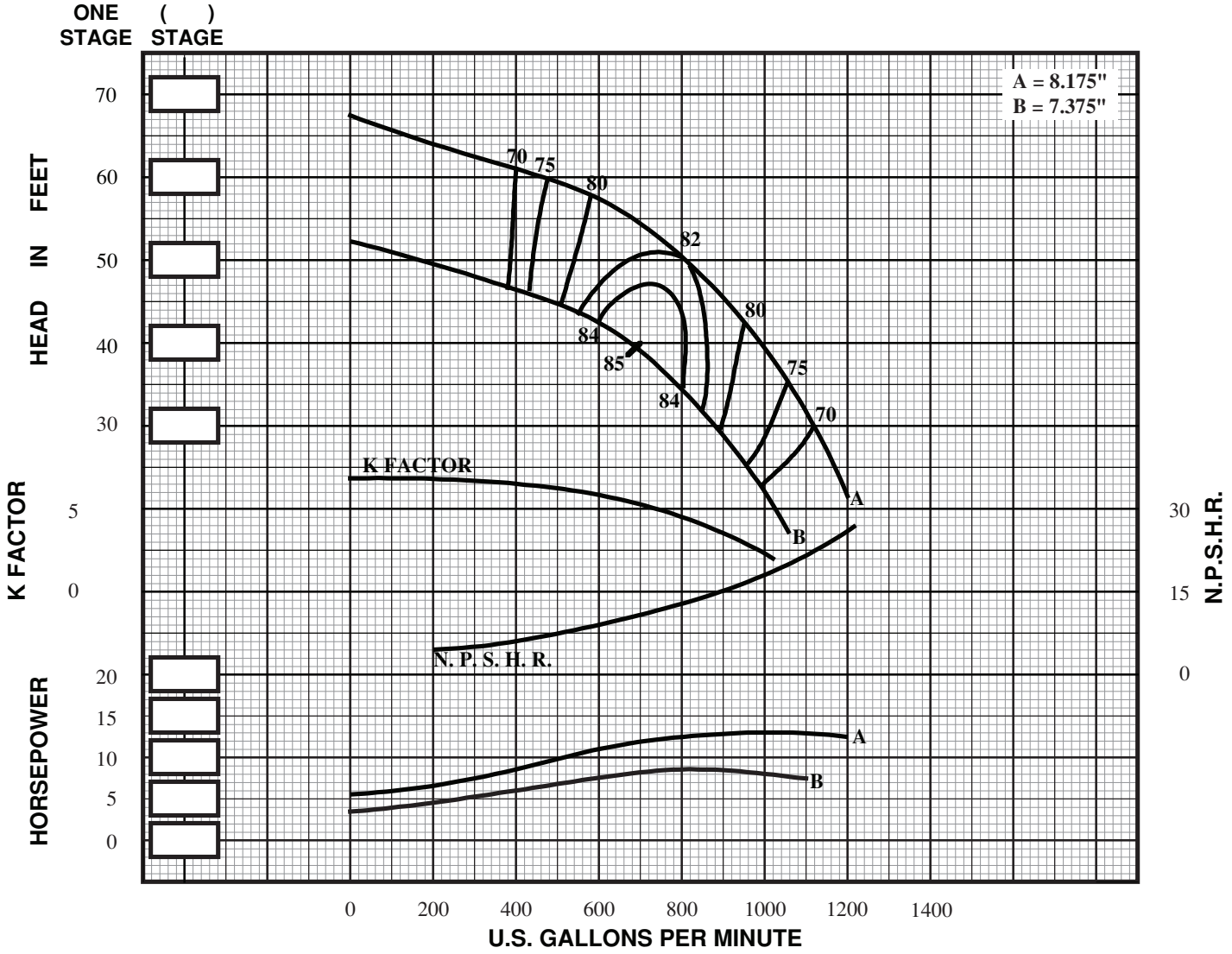

IMPELLER TYPE	= ENCLOSED	STD. SHAFT DIA.	= 1.500"	NO. STAGES	EFF. CHANGE	MATERIAL	B.E.P. EFF. CHANGE
IMPELLER NO.	= SM10H	MAX. SHAFT DIA.	= 1.500"				
IMPELLER WT. - LBS.	= 10.8	STD. LATERAL	= .81"	1	-4	IMP. - C.I.	-3
ONE STAGE WT. - LBS.	= 195.0	DISCHARGE SIZES	= 6"/ 8"	2	-3	IMP. - NI-RI	-2
ADD'L STAGE WT. - LBS.	= 75.0	SUCTION SIZES	= 6"/ BELL	3	-2	IMP. - S.S.	-4
MAX. SPHERE SIZE	= .88"	ONE STAGE WR^2	= .386	4	-1	BOWL - BRZ.	-2
MIN. SUBMERGENCE*	= 16"		=	5	0	BOWL - NI-RI	-1
Δ CONSULT FACTORY			v18.1			BOWL - S.S.	-2

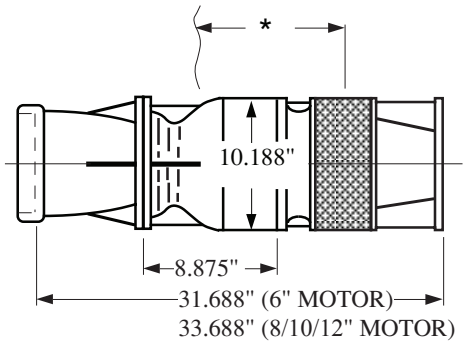

SUBMERSIBLE TURBINE

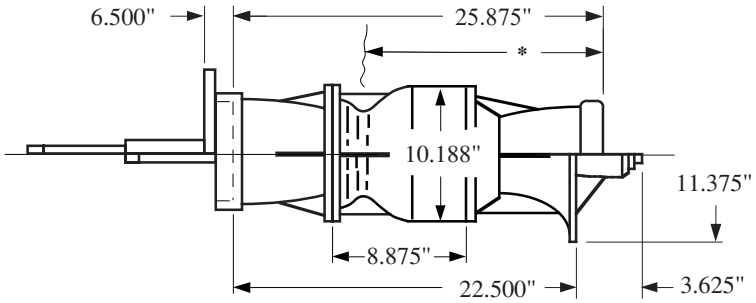

LINESHAFT TURBINE

SIMFLO®

Section 202
Date 9/1/06

SM11M

1770 RPM

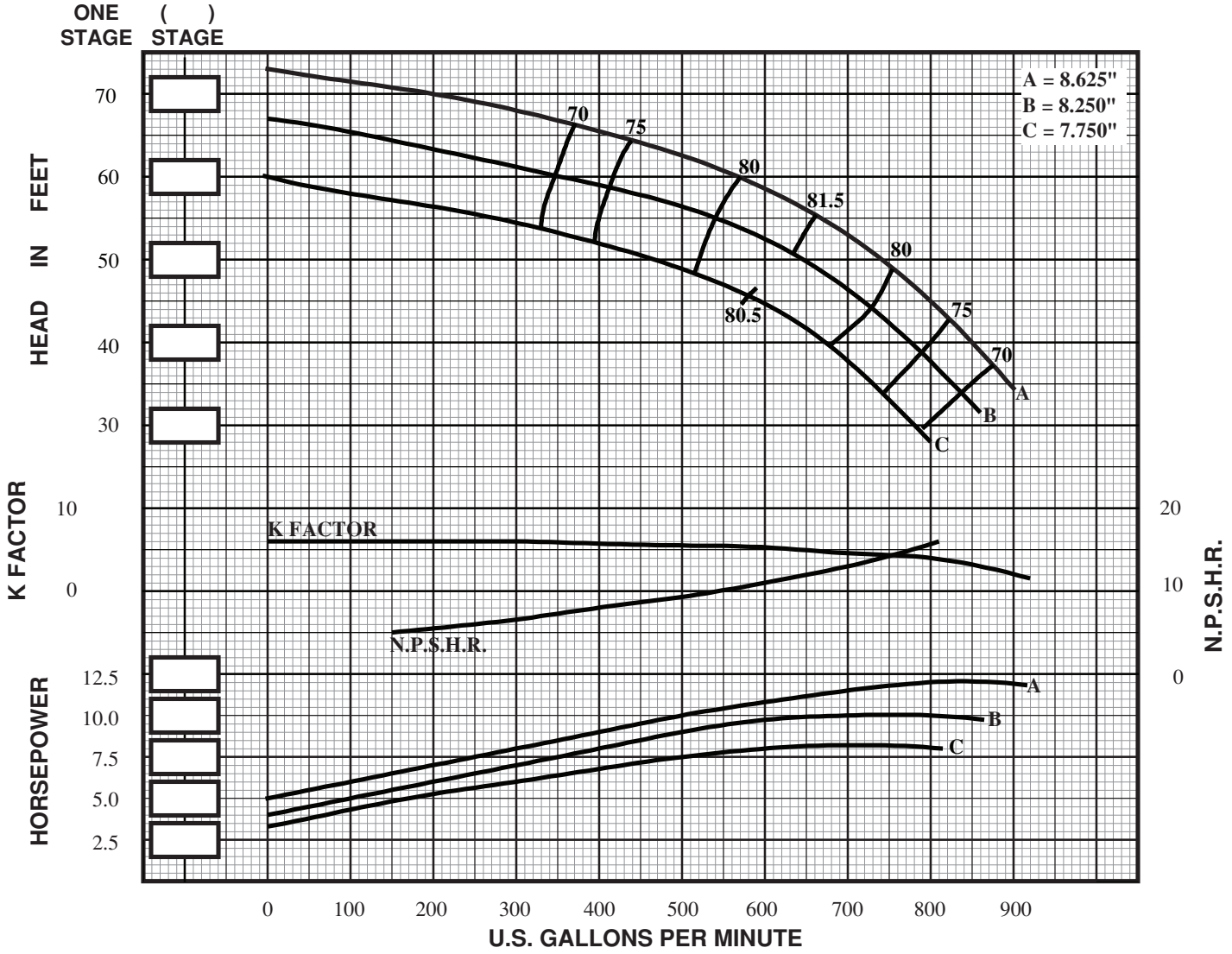

IMPELLER TYPE	= ENCLOSED	STD. SHAFT DIA.	= 1.500"	NO. STAGES	EFF. CHANGE	MATERIAL	B.E.P. EFF. CHANGE
IMPELLER NO.	= SM11M	MAX. SHAFT DIA.	= 1.500"				
IMPELLER WT. - LBS.	= 9.5	STD. LATERAL	= .88"	1	-3	IMP. - C.I.	-3
ONE STAGE WT. - LBS.	= 195.0	DISCHARGE SIZES	= 6"/ 8"/ 10"	2	-2	IMP. - NI-RI	-2
ADD'L STAGE WT. - LBS.	= 75.0	SUCTION SIZES	= 6"/ BELL	3	-1	IMP. - S.S.	-4
MAX. SPHERE SIZE	= .81"	ONE STAGE WR^2	= .382	4	0	BOWL - BRZ.	-2
MIN. SUBMERGENCE*	= 14"		=	5	0	BOWL - NI-RI	-1
Δ CONSULT FACTORY			v18.1			BOWL - S.S.	-3

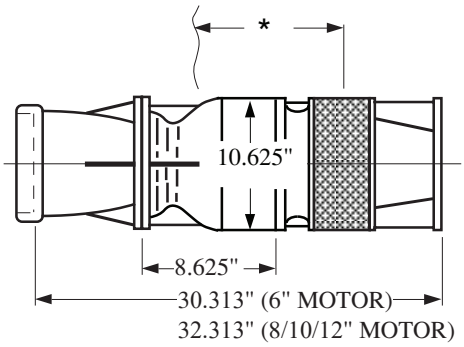

SUBMERSIBLE TURBINE

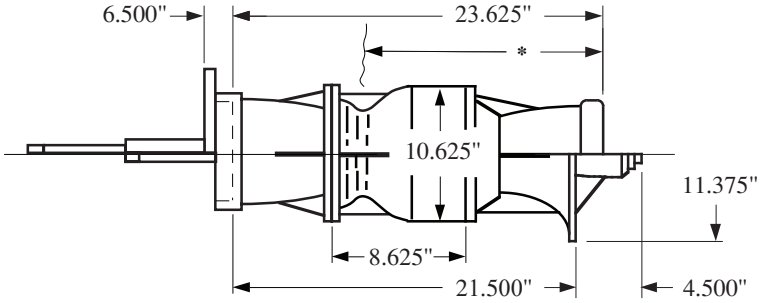

LINESHAFT TURBINE

SIMFLO®

Section 202
Date 9/1/06

SM11H

1770 RPM

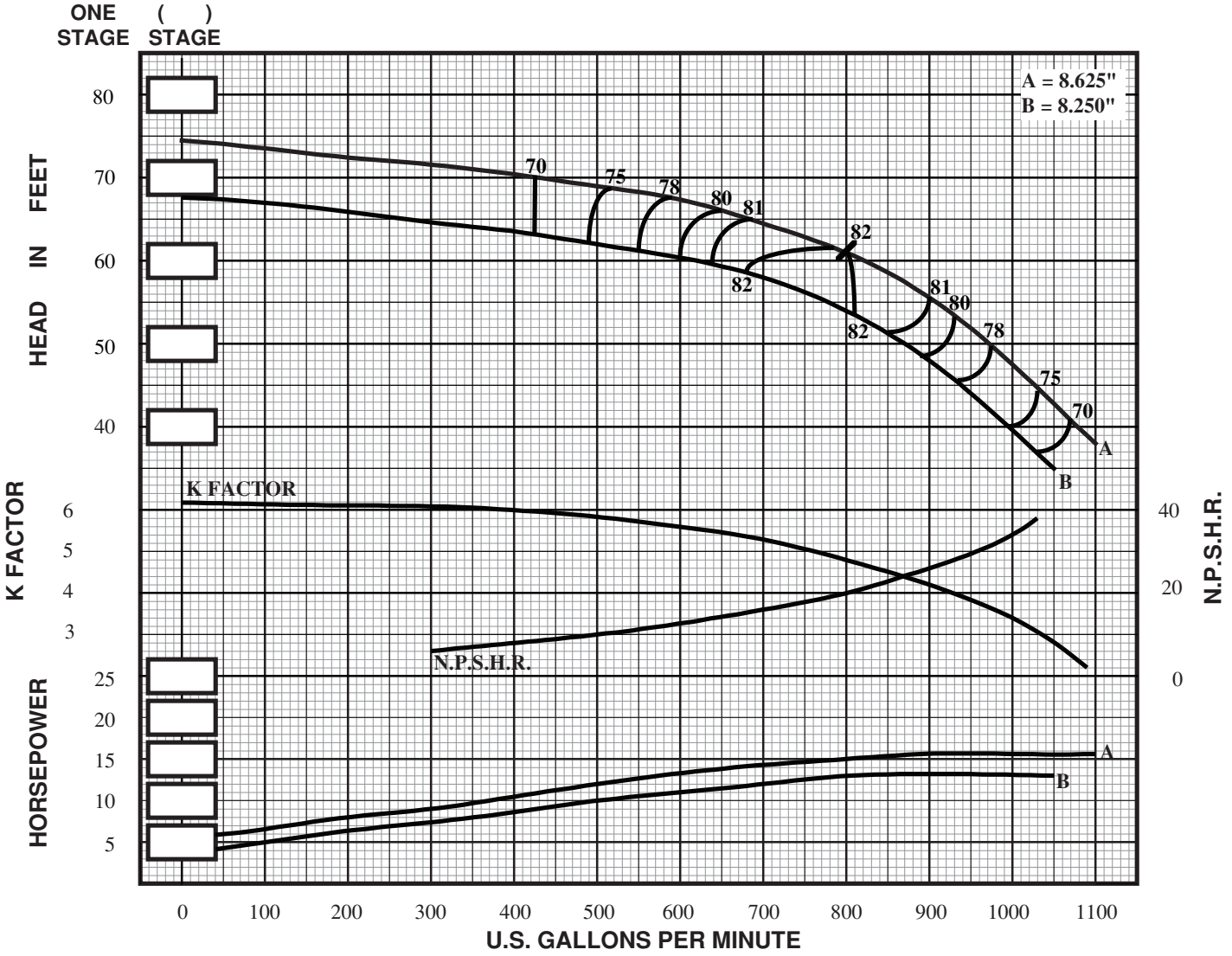

IMPELLER TYPE	= ENCLOSED	STD. SHAFT DIA.	= 1.500"	NO. STAGES	EFF. CHANGE	MATERIAL	B.E.P. EFF. CHANGE
IMPELLER NO.	= SM11H	MAX. SHAFT DIA.	= 1.500"				
IMPELLER WT. - LBS.	= 11.0	STD. LATERAL	= .94"	1	-3	IMP. - C.I.	-3
ONE STAGE WT. - LBS.	= 195.0	DISCHARGE SIZES	= 6"/ 8"/ 10"	2	-2	IMP. - NI-RI	-2
ADD'L STAGE WT. - LBS.	= 75.0	SUCTION SIZES	= 6" / BELL	3	-1	IMP. - S.S.	-4
MAX. SPHERE SIZE	= .81"	ONE STAGE WR^2	= .450	4	0	BOWL - BRZ.	-2
MIN. SUBMERGENCE*	= 14"		=	5	0	BOWL - NI-RI	-1
Δ CONSULT FACTORY			v18.1			BOWL - S.S.	-3

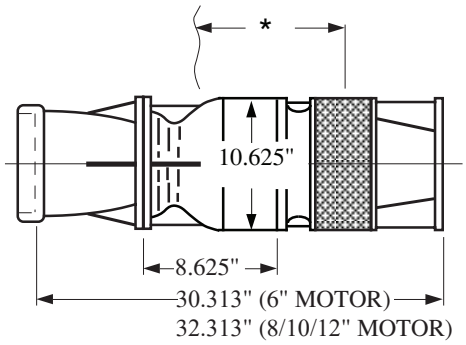

SUBMERSIBLE TURBINE

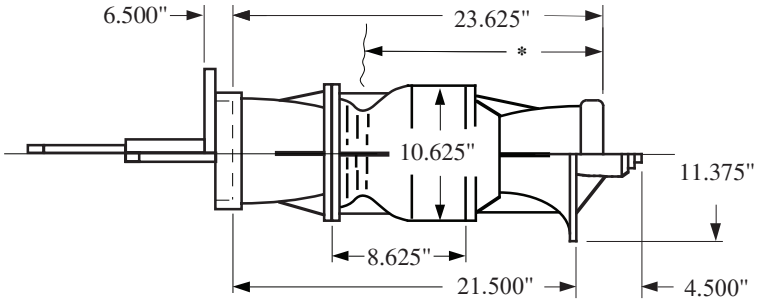

LINESHAFT TURBINE

SIMFLO®

Section 202
Date 9/1/06

SL11H

1770 RPM

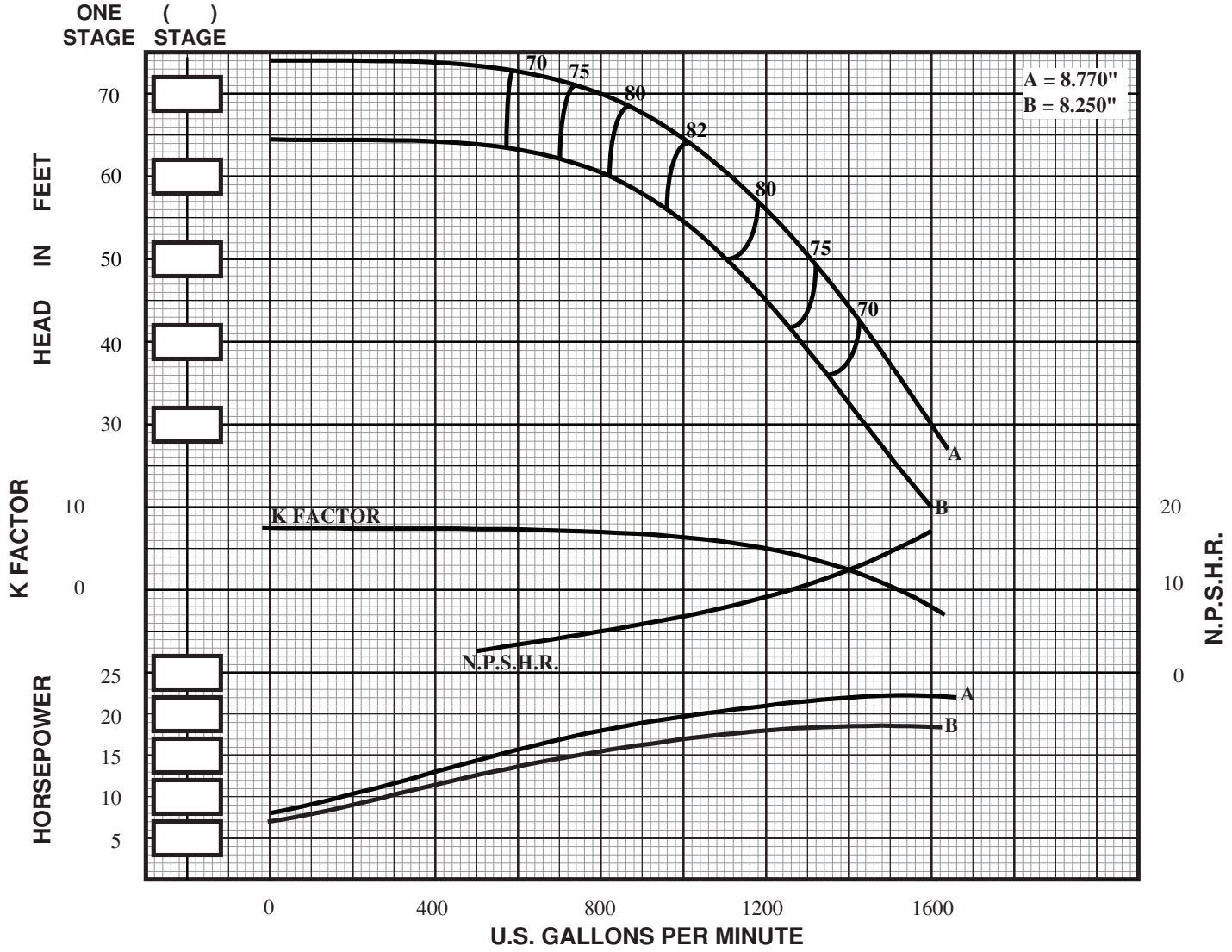

IMPELLER TYPE	= ENCLOSED	STD. SHAFT DIA.	= 1.688"	NO. STAGES	EFF. CHANGE	MATERIAL	B.E.P. EFF. CHANGE
IMPELLER NO.	= SL11H	MAX. SHAFT DIA.	= 1.688"				
IMPELLER WT. - LBS.	= 13.0	STD. LATERAL	= 1.44"	1	-3	IMP. - C.I.	-2
ONE STAGE WT. - LBS.	= 200.0	DISCHARGE SIZES	= 6"/ 8"/ 10"	2	-2	IMP. - NI-RI	-2
ADD'L STAGE WT. - LBS.	= 81.0	SUCTION SIZES	= 8"/ BELL	3	-1	IMP. - S.S.	-3
MAX. SPHERE SIZE	= .88"	ONE STAGE WR^2	= .532	4	0	BOWL - BRZ.	-2
MIN. SUBMERGENCE*	= 15"		=	5	0	BOWL - NI-RI	-1
Δ CONSULT FACTORY			v18.1			BOWL - S.S.	-2

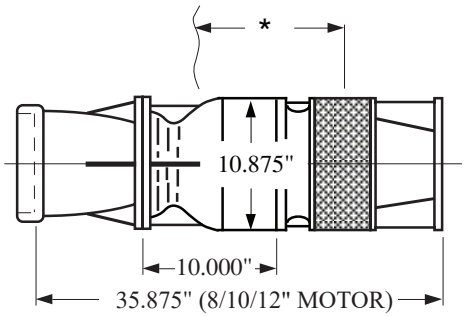

SUBMERSIBLE TURBINE

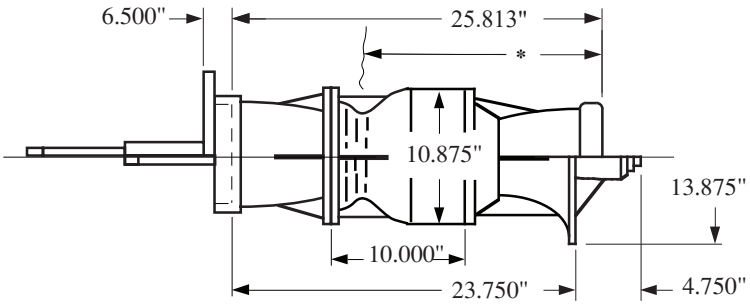

LINESHAFT TURBINE

SIMFLO®

Section 202
Date 9/1/06

SR11MO

1770 RPM

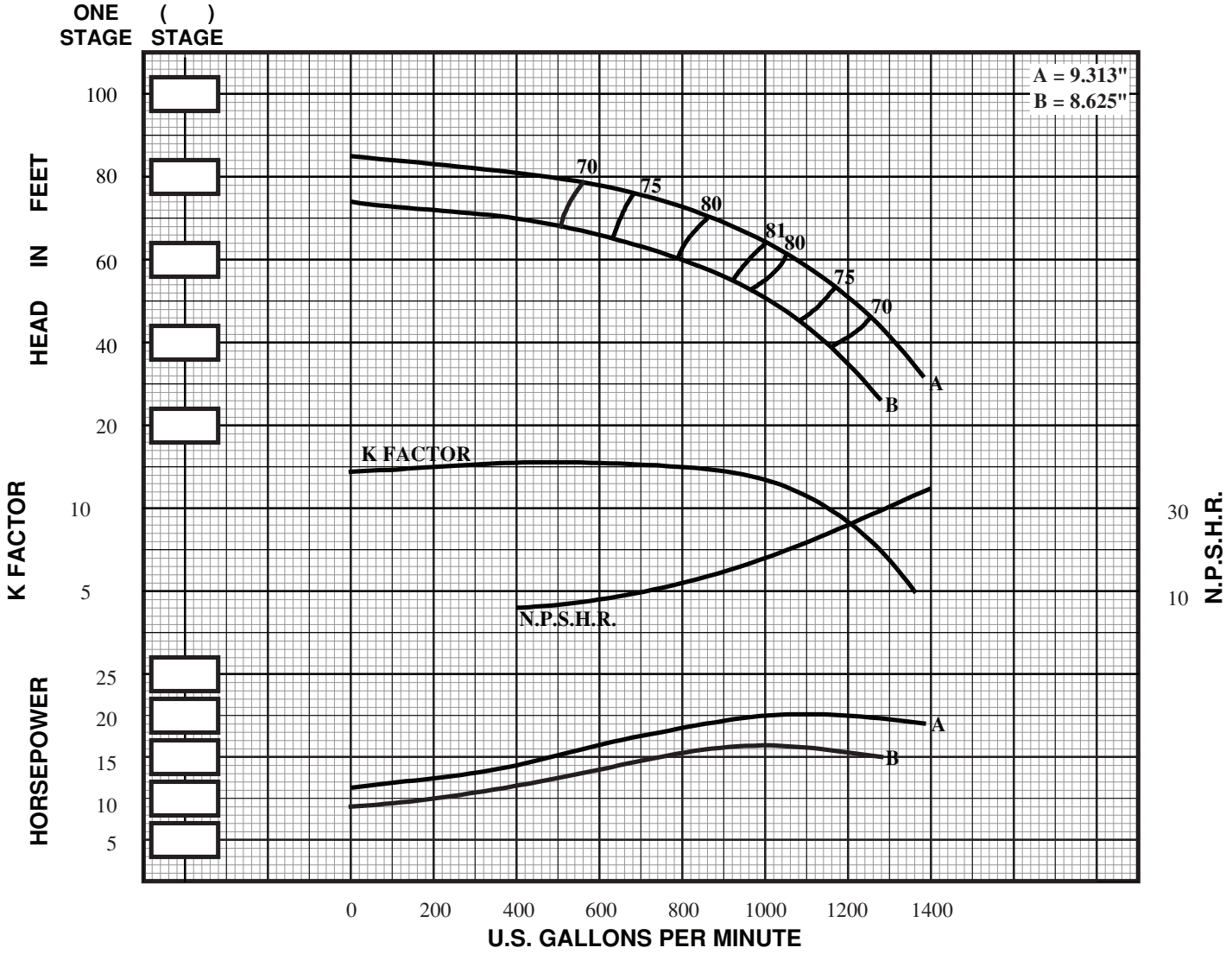

IMPELLER TYPE	= SEMI-OPEN	STD. SHAFT DIA.	= 1.687"	NO. STAGES	EFF. CHANGE	MATERIAL	B.E.P. EFF. CHANGE
IMPELLER NO.	= SR11MO	MAX. SHAFT DIA.	= 1.687"				
IMPELLER WT. - LBS.	= 8.0	STD. LATERAL	= 1.13"	1	-3	IMP. - C.I.	-1
ONE STAGE WT. - LBS.	= 270.0	DISCHARGE SIZES	= 8"/ 10"	2	-2	IMP. - NI-RI	-2
ADD'L STAGE WT. - LBS.	= 100.0	SUCTION SIZES	= 8"/ BELL	3	-1	IMP. - S.S.	NOT RECOM.
MAX. SPHERE SIZE	= .75"	ONE STAGE WR^2	= .375	4	0	BOWL - BRZ.	-1
MIN. SUBMERGENCE*	= 15"		=	5	0	BOWL - NI-RI	-1
Δ CONSULT FACTORY			v18.1			BOWL - S.S.	-2

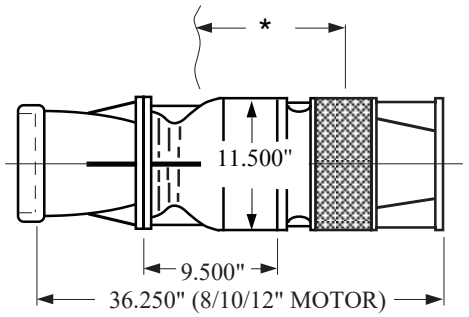

SUBMERSIBLE TURBINE

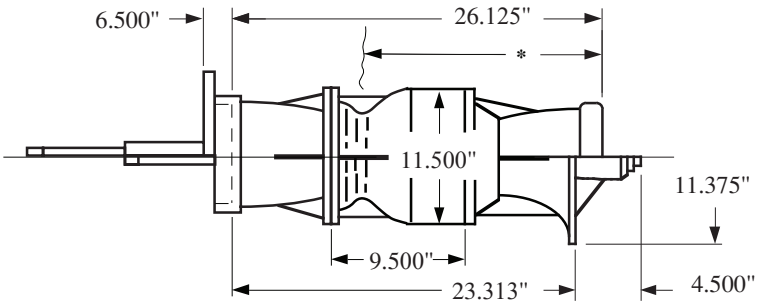

LINESHAFT TURBINE

SIMFLO®

Section 202
Date 9/1/06

SR11HO

1770 RPM

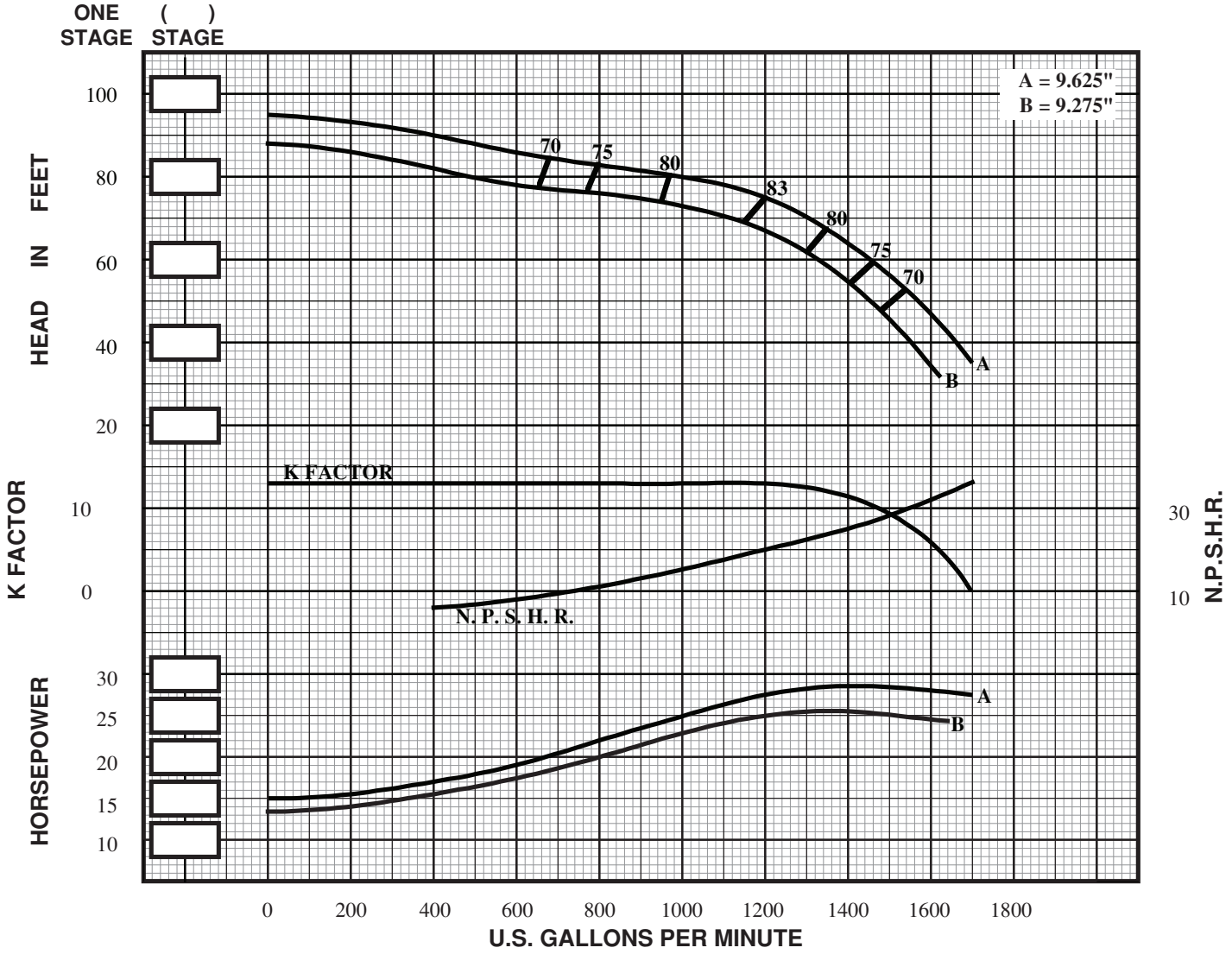

IMPELLER TYPE	= SEMI-OPEN	STD. SHAFT DIA.	= 1.687"	NO. STAGES	EFF. CHANGE	MATERIAL	B.E.P. EFF. CHANGE
IMPELLER NO.	= SR11HO	MAX. SHAFT DIA.	= 1.687"				
IMPELLER WT. - LBS.	= 8.35	STD. LATERAL	= .72"	1	-3	IMP. - C.I.	0
ONE STAGE WT. - LBS.	= 270.0	DISCHARGE SIZES	= 8"/ 10"	2	-2	IMP. - NI-RI	-2
ADD'L STAGE WT. - LBS.	= 100.0	SUCTION SIZES	= 8"/ BELL	3	-1	IMP. - S.S.	NOT RECOM.
MAX. SPHERE SIZE	= .75"	ONE STAGE WR^2	= .411	4	0	BOWL - BRZ.	-1
MIN. SUBMERGENCE*	= 15"		=	5	0	BOWL - NI-RI	-1
			v18.1			BOWL - S.S.	-2

Δ CONSULT FACTORY

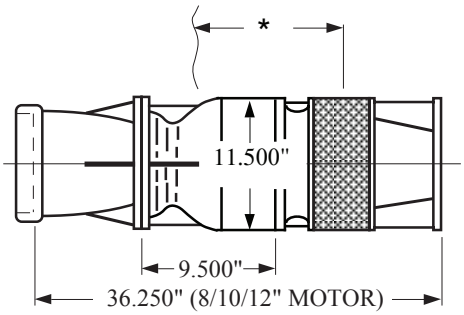

SUBMERSIBLE TURBINE

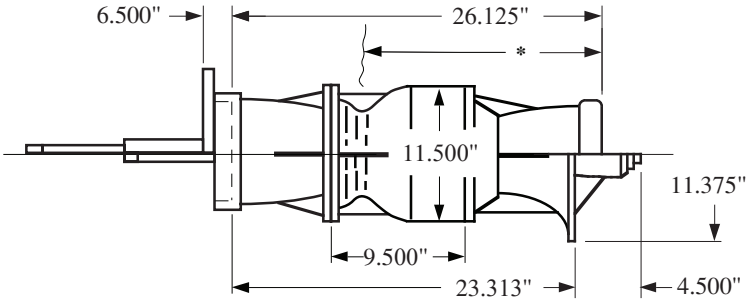

LINESHAFT TURBINE

SIMFLO®

Section 202
Date 9/1/06

SP11L

1770 RPM

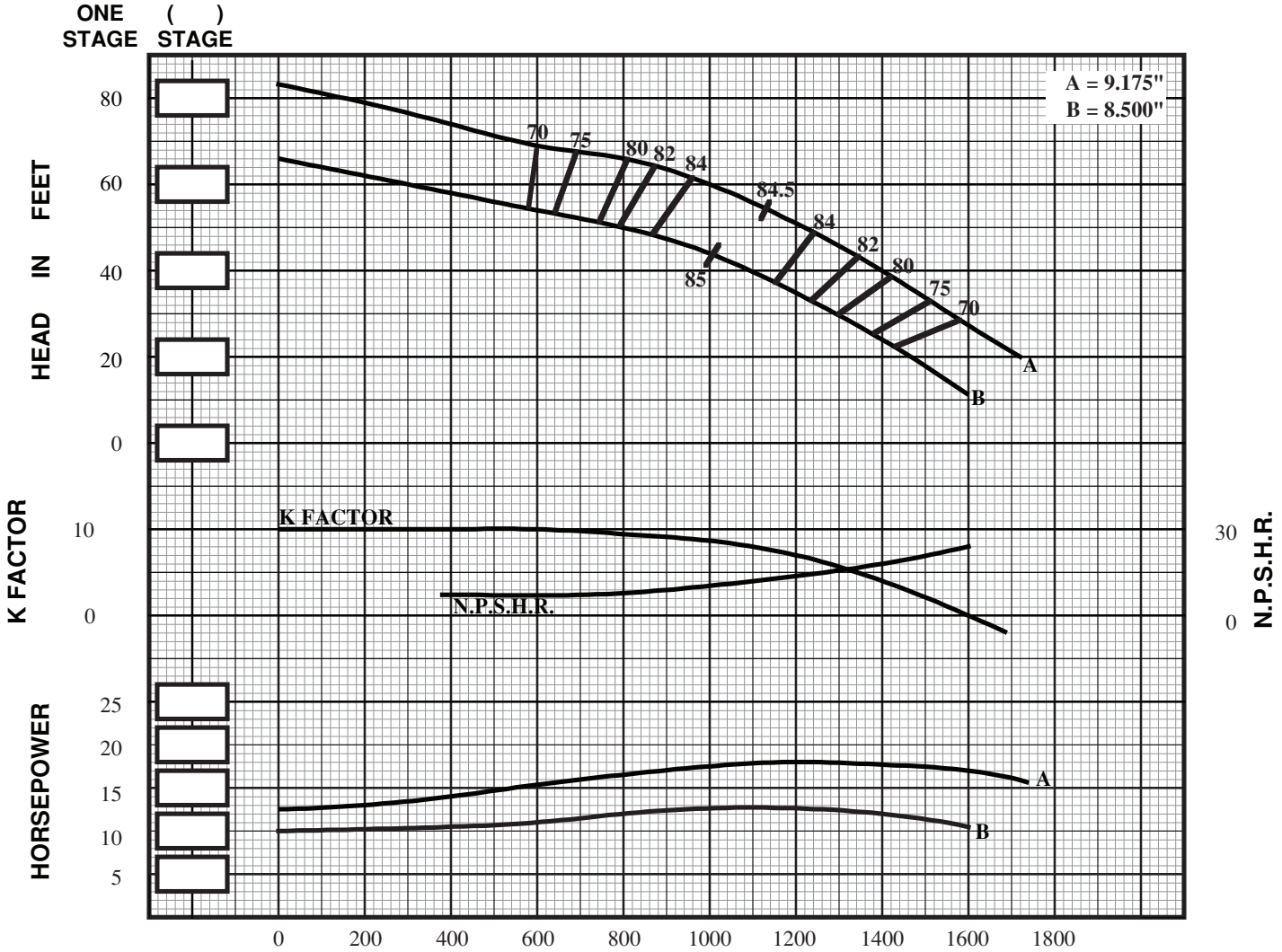

IMPELLER TYPE	= ENCLOSED	STD. SHAFT DIA.	= 1.937"	NO. STAGES	EFF. CHANGE	MATERIAL	B.E.P. EFF. CHANGE
IMPELLER NO.	= SP11L	MAX. SHAFT DIA.	= 1.937"				
IMPELLER WT. - LBS.	= 16.4	STD. LATERAL	= 1.13"	1	-4	IMP. - C.I.	0
ONE STAGE WT. - LBS.	= 290.0	DISCHARGE SIZES	= 8"/ 10"	2	-3	IMP. - NI-RI	-2
ADD'L STAGE WT. - LBS.	= 105.0	SUCTION SIZES	= 8"/ BELL	3	-2	IMP. - S.S.	-1
MAX. SPHERE SIZE	= 1.19"	ONE STAGE WR^2	= .754	4	-1	BOWL - BRZ.	-1
MIN. SUBMERGENCE*	= 18"		=	5	0	BOWL - NI-RI	-1
Δ CONSULT FACTORY			v18.1			BOWL - S.S.	-2

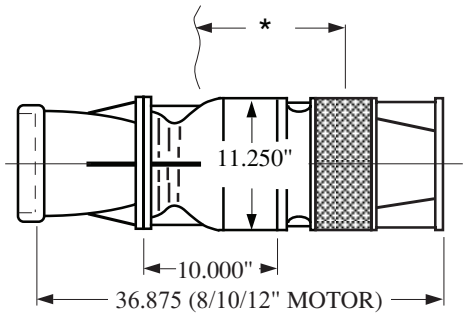

SUBMERSIBLE TURBINE

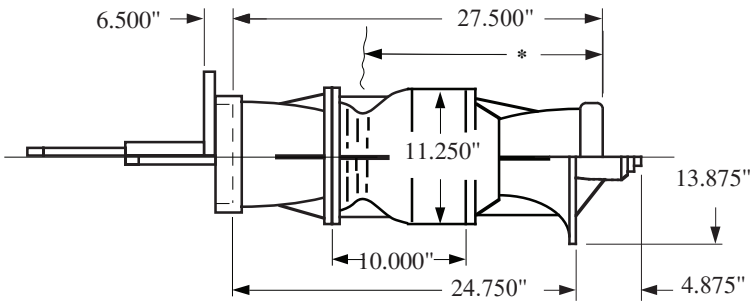

LINESHAFT TURBINE

SIMFLO®

Section 202
Date 9/1/06

SP11M

1770 RPM

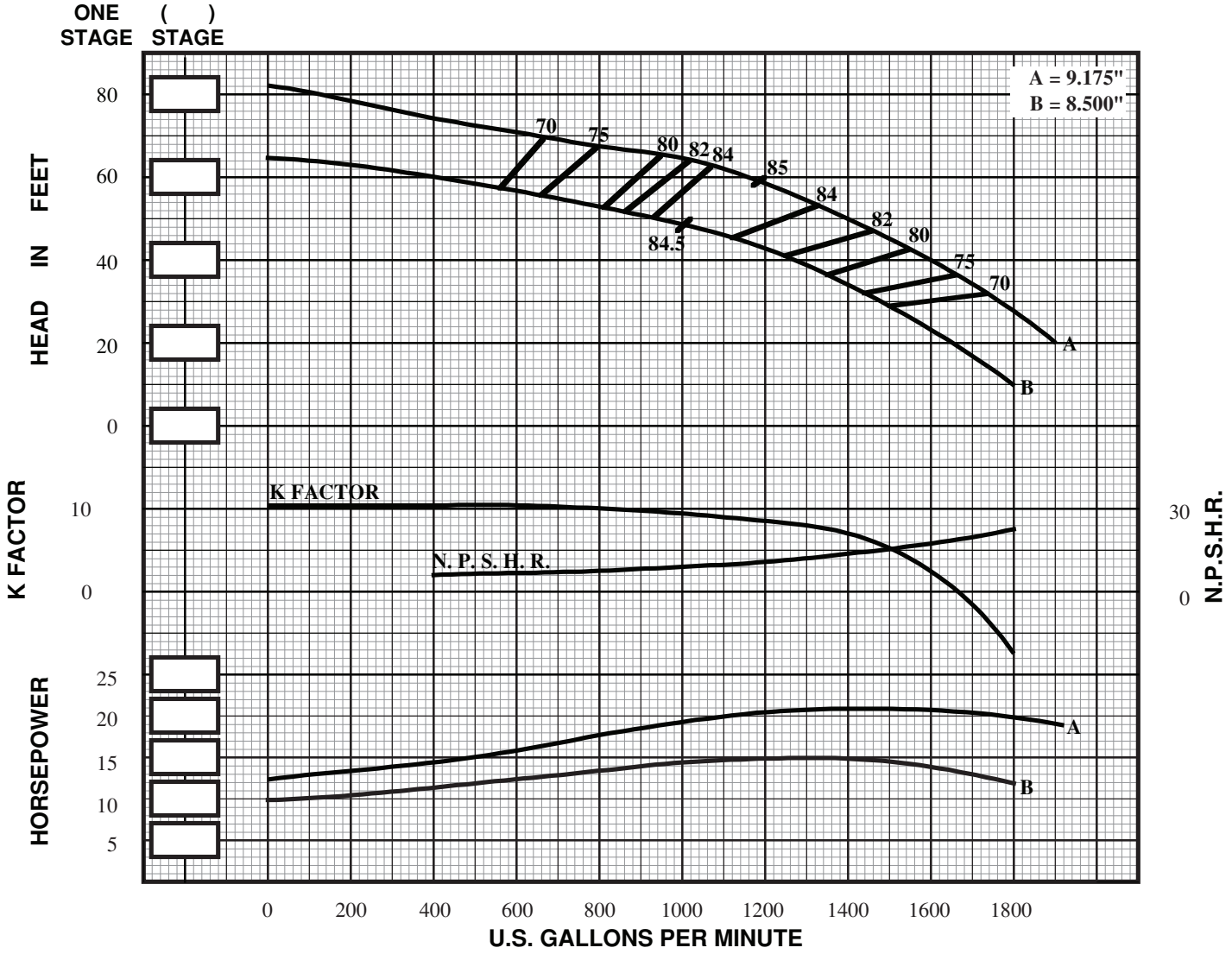

IMPELLER TYPE	= ENCLOSED	STD. SHAFT DIA.	= 1.937"	NO. STAGES	EFF. CHANGE	MATERIAL	B.E.P. EFF. CHANGE
IMPELLER NO.	= SP11M	MAX. SHAFT DIA.	= 1.937"				
IMPELLER WT. - LBS.	= 14.3	STD. LATERAL	= 1.13"	1	-3	IMP. - C.I.	0
ONE STAGE WT. - LBS.	= 290.0	DISCHARGE SIZES	= 8"/ 10"	2	-2	IMP. - NI-RI	-2
ADD'L STAGE WT. - LBS.	= 105.0	SUCTION SIZES	= 8"/ BELL	3	-1	IMP. - S.S.	-2
MAX. SPHERE SIZE	= 1.19"	ONE STAGE WR^2	= .670	4	0	BOWL - BRZ.	-1
MIN. SUBMERGENCE*	= 18"		=	5	0	BOWL - NI-RI	-1
Δ CONSULT FACTORY			v18.1			BOWL - S.S.	-2

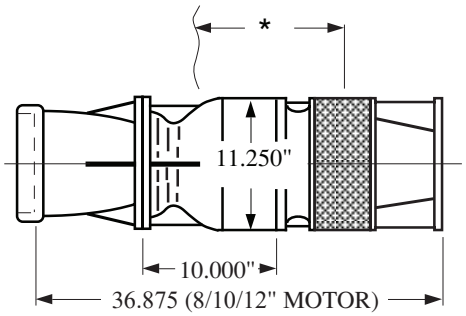

SUBMERSIBLE TURBINE

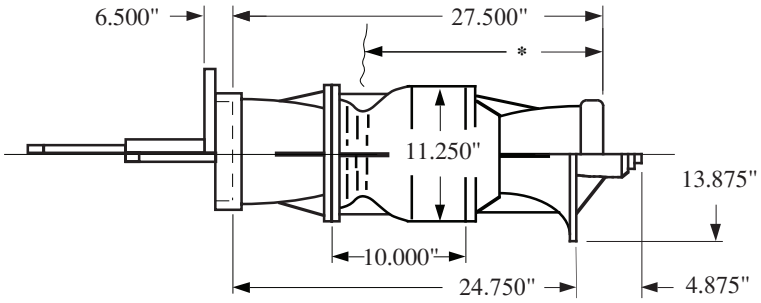

LINESHAFT TURBINE

SIMFLO®

Section 202
Date 9/1/06

SP11H

1770 RPM

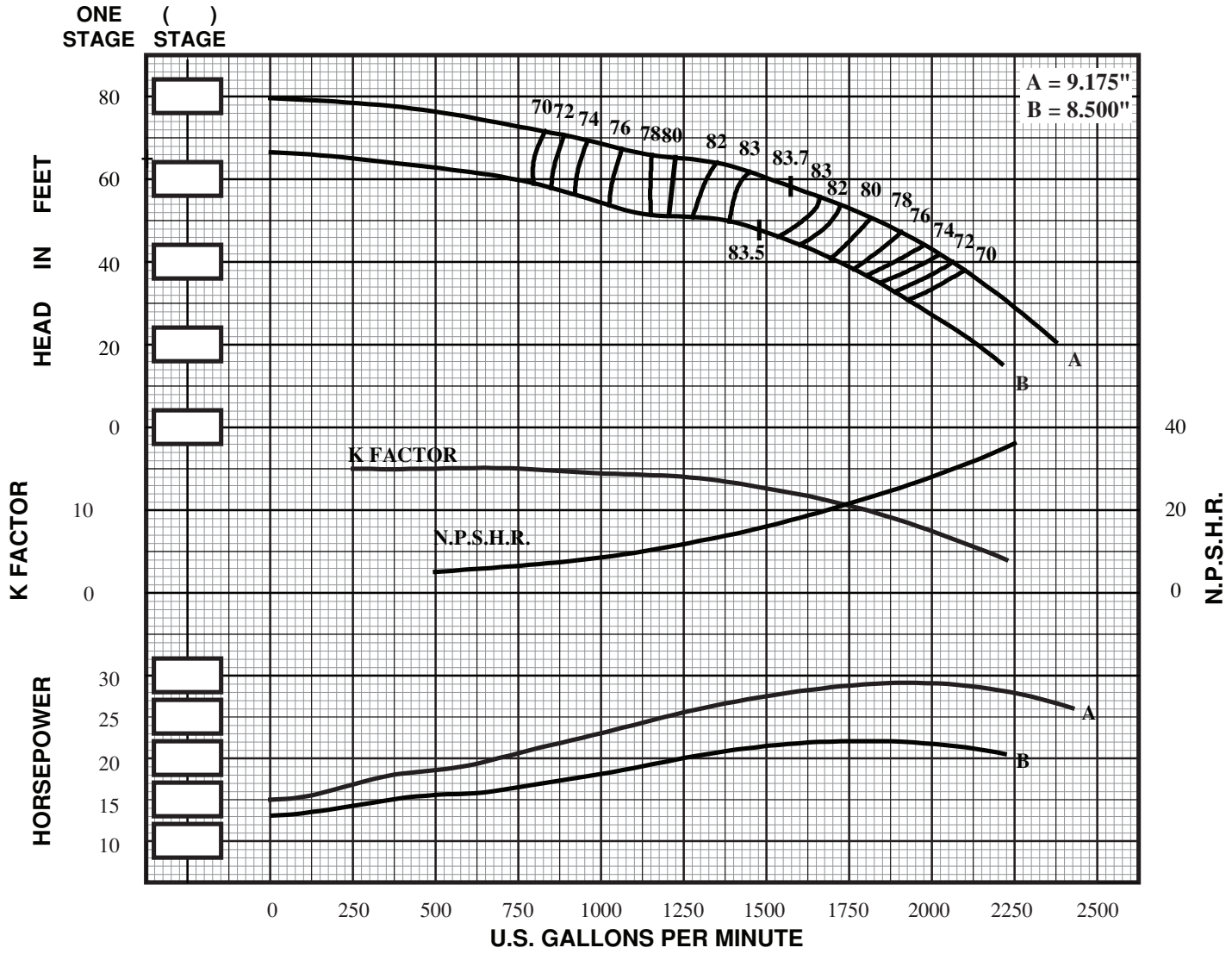

IMPELLER TYPE	= ENCLOSED	STD. SHAFT DIA.	= 1.937"	NO. STAGES	EFF. CHANGE	MATERIAL	B.E.P. EFF. CHANGE
IMPELLER NO.	= SP11H	MAX. SHAFT DIA.	= 1.937"				
IMPELLER WT. - LBS.	= 14.9	STD. LATERAL	= 1.13"	1	-3	IMP. - C.I.	0
ONE STAGE WT. - LBS.	= 290.0	DISCHARGE SIZES	= 8"/ 10"	2	-2	IMP. - NI-RI	-2
ADD'L STAGE WT. - LBS.	= 105.0	SUCTION SIZES	= 8"/ BELL	3	-1	IMP. - S.S.	-2
MAX. SPHERE SIZE	= 1.19"	ONE STAGE WR^2	= .718	4	0	BOWL - BRZ.	-1
MIN. SUBMERGENCE*	= 18"		=	5	0	BOWL - NI-RI	-1
Δ CONSULT FACTORY			v18.1			BOWL - S.S.	-2

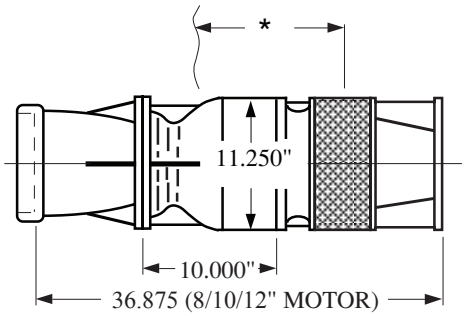

SUBMERSIBLE TURBINE

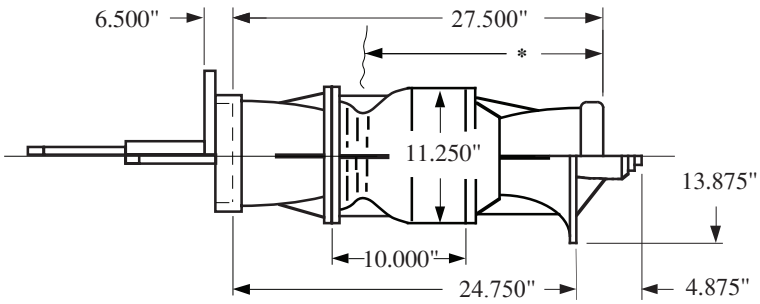

LINESHAFT TURBINE

SIMFLO®

Section 202
Date 9/1/06

SW12L

1770 RPM

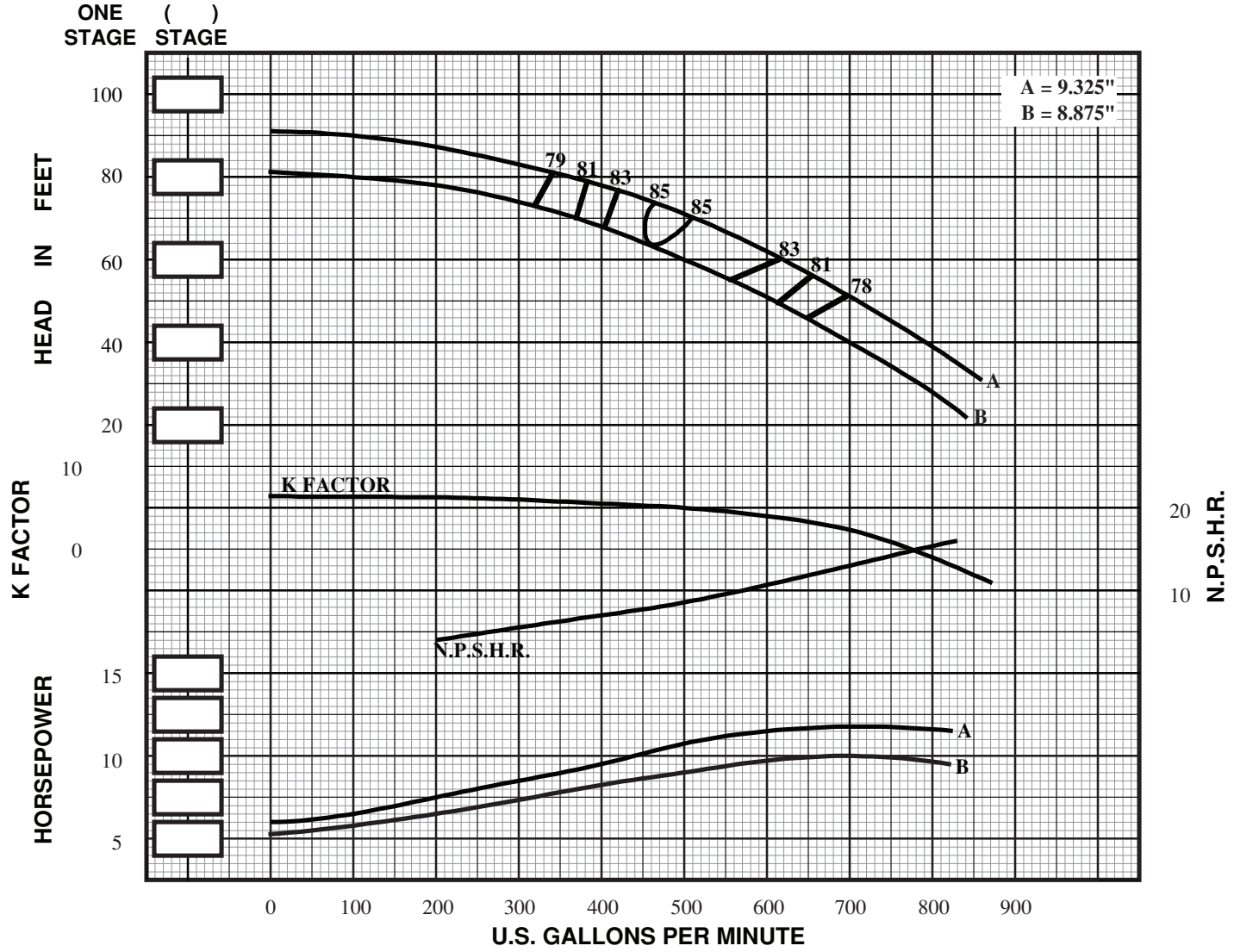

IMPELLER TYPE	= ENCLOSED	STD. SHAFT DIA.	= 1.687"	NO. STAGES	EFF. CHANGE	MATERIAL	B.E.P. EFF. CHANGE
IMPELLER NO.	= SW12L	MAX. SHAFT DIA.	= 1.687"				
IMPELLER WT. - LBS.	= 13.8	STD. LATERAL	= 1.13"	1	-3	IMP. - C.I.	-2
ONE STAGE WT. - LBS.	= 235.0	DISCHARGE SIZES	= 6"/ 8"/ 10"	2	-2	IMP. - NI-RI	-2
ADD'L STAGE WT. - LBS.	= 105.0	SUCTION SIZES	= 6"/ BELL	3	-1	IMP. - S.S.	-3
MAX. SPHERE SIZE	= .66"	ONE STAGE WR^2	= .642	4	0	BOWL - BRZ.	-2
MIN. SUBMERGENCE*	= 16"		=	5	0	BOWL - NI-RI	-1
Δ CONSULT FACTORY			v18.1			BOWL - S.S.	-4

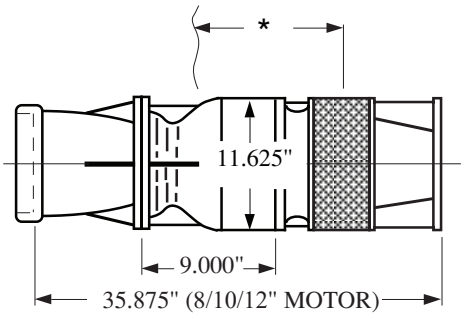

SUBMERSIBLE TURBINE

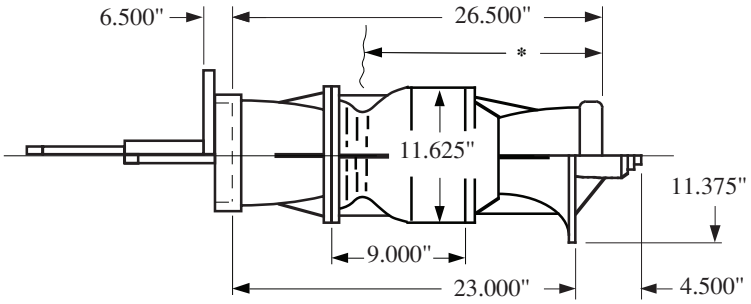

LINESHAFT TURBINE

SIMFLO®

Section 202
Date 9/1/06

SW12M

1770 RPM

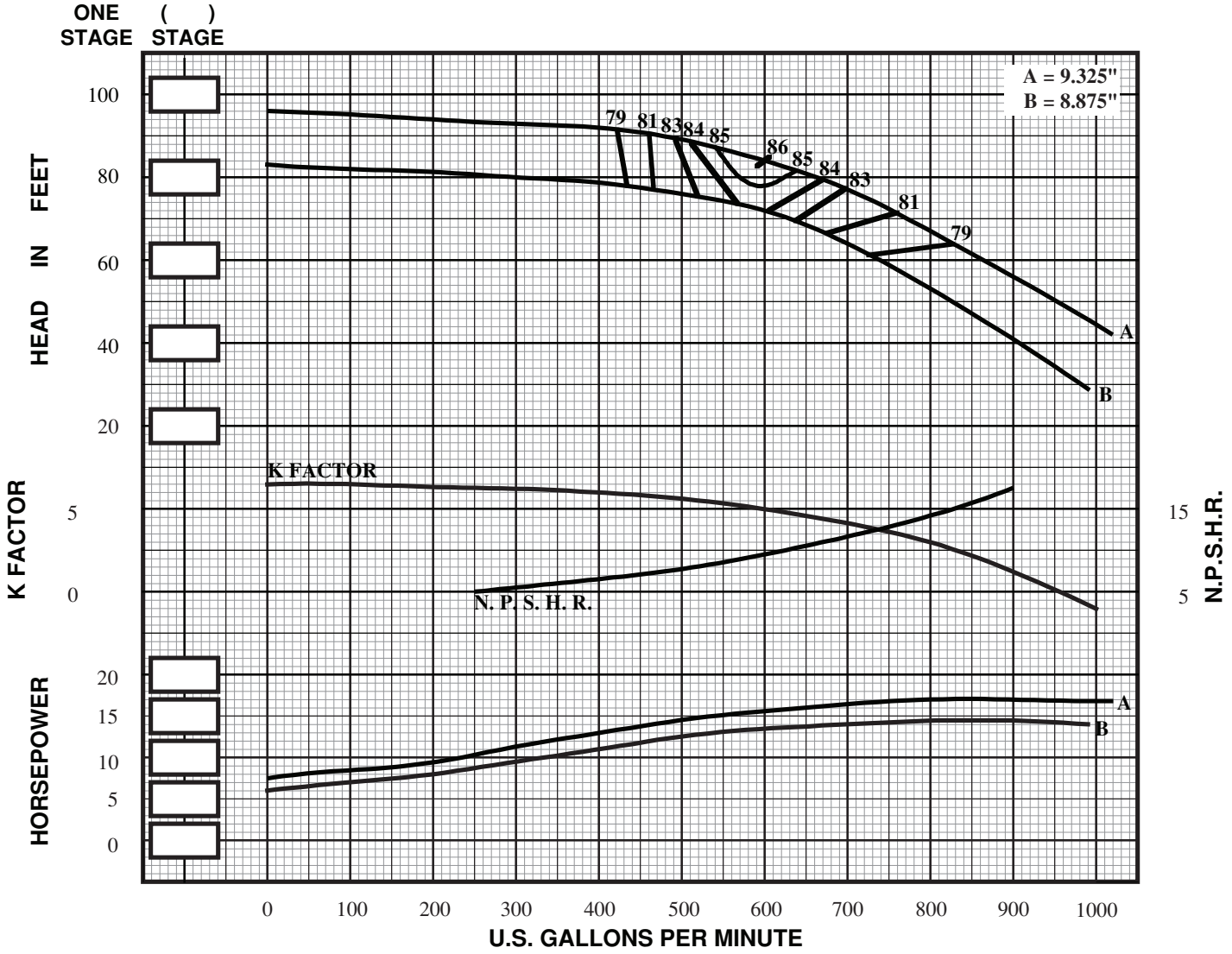

IMPELLER TYPE	= ENCLOSED	STD. SHAFT DIA.	= 1.687"	NO. STAGES	EFF. CHANGE	MATERIAL	B.E.P. EFF. CHANGE
IMPELLER NO.	= SW12M	MAX. SHAFT DIA.	= 1.687"				
IMPELLER WT. - LBS.	= 14.5	STD. LATERAL	= 1.13"	1	-3	IMP. - C.I.	-2
ONE STAGE WT. - LBS.	= 235.0	DISCHARGE SIZES	= 6"/ 8"/ 10"	2	-2	IMP. - NI-RI	-2
ADD'L STAGE WT. - LBS.	= 105.0	SUCTION SIZES	= 6"/ BELL	3	-1	IMP. - S.S.	-3
MAX. SPHERE SIZE	= .66"	ONE STAGE WR^2	= .673	4	0	BOWL - BRZ.	-2
MIN. SUBMERGENCE*	= 16"		=	5	0	BOWL - NI-RI	-1
Δ CONSULT FACTORY			v18.1			BOWL - S.S.	-4

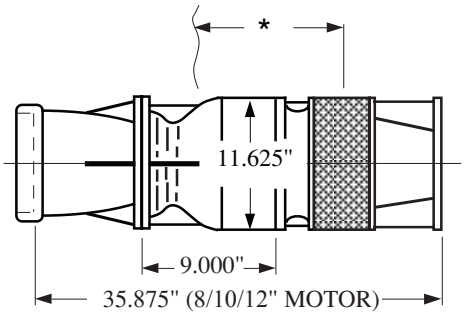

SUBMERSIBLE TURBINE

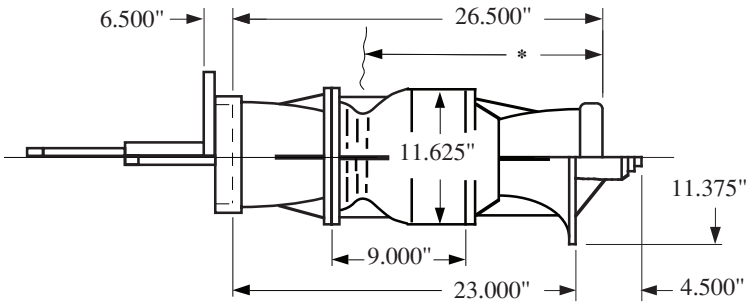

LINESHAFT TURBINE

SIMFLO®

Section 202
Date 9/1/06

SP12M

1770 RPM

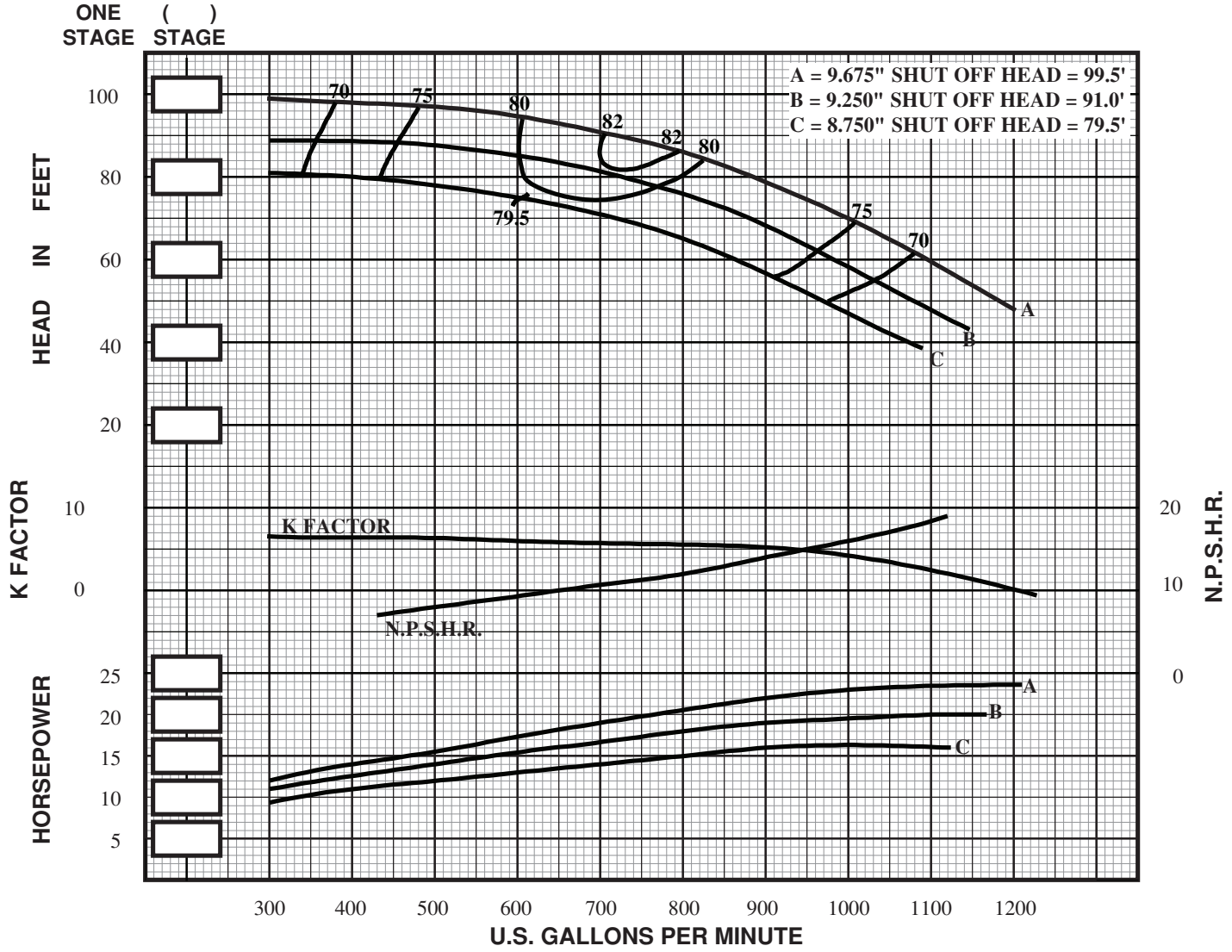

IMPELLER TYPE	= ENCLOSED	STD. SHAFT DIA.	= 1.687"	NO. STAGES	EFF. CHANGE	MATERIAL	B.E.P. EFF. CHANGE
IMPELLER NO.	= SP12M	MAX. SHAFT DIA.	= 1.687"				
IMPELLER WT. - LBS.	= 15.0	STD. LATERAL	= 1.00"	1	-3	IMP. - C.I.	-1
ONE STAGE WT. - LBS.	= 260.0	DISCHARGE SIZES	= 6"/ 8"/ 10"	2	-2	IMP. - NI-RI	-2
ADD'L STAGE WT. - LBS.	= 120.0	SUCTION SIZES	= 8"/ BELL	3	-1	IMP. - S.S.	-2
MAX. SPHERE SIZE	= .81"	ONE STAGE WR^2	= .746	4	0	BOWL - BRZ.	-1
MIN. SUBMERGENCE*	= 16"		=	5	0	BOWL - NI-RI	-1
Δ CONSULT FACTORY			v18.1			BOWL - S.S.	-2

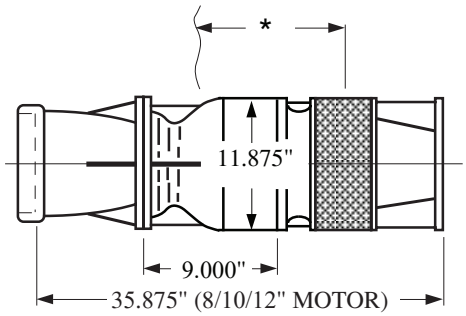

SUBMERSIBLE TURBINE

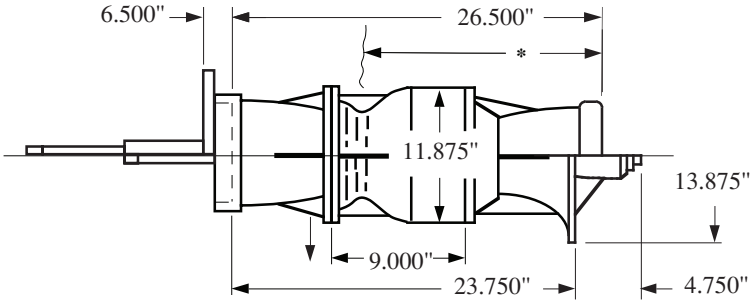

LINESHAFT TURBINE

SIMFLO®

Section 202
Date 9/1/06

SP12H

1770 RPM

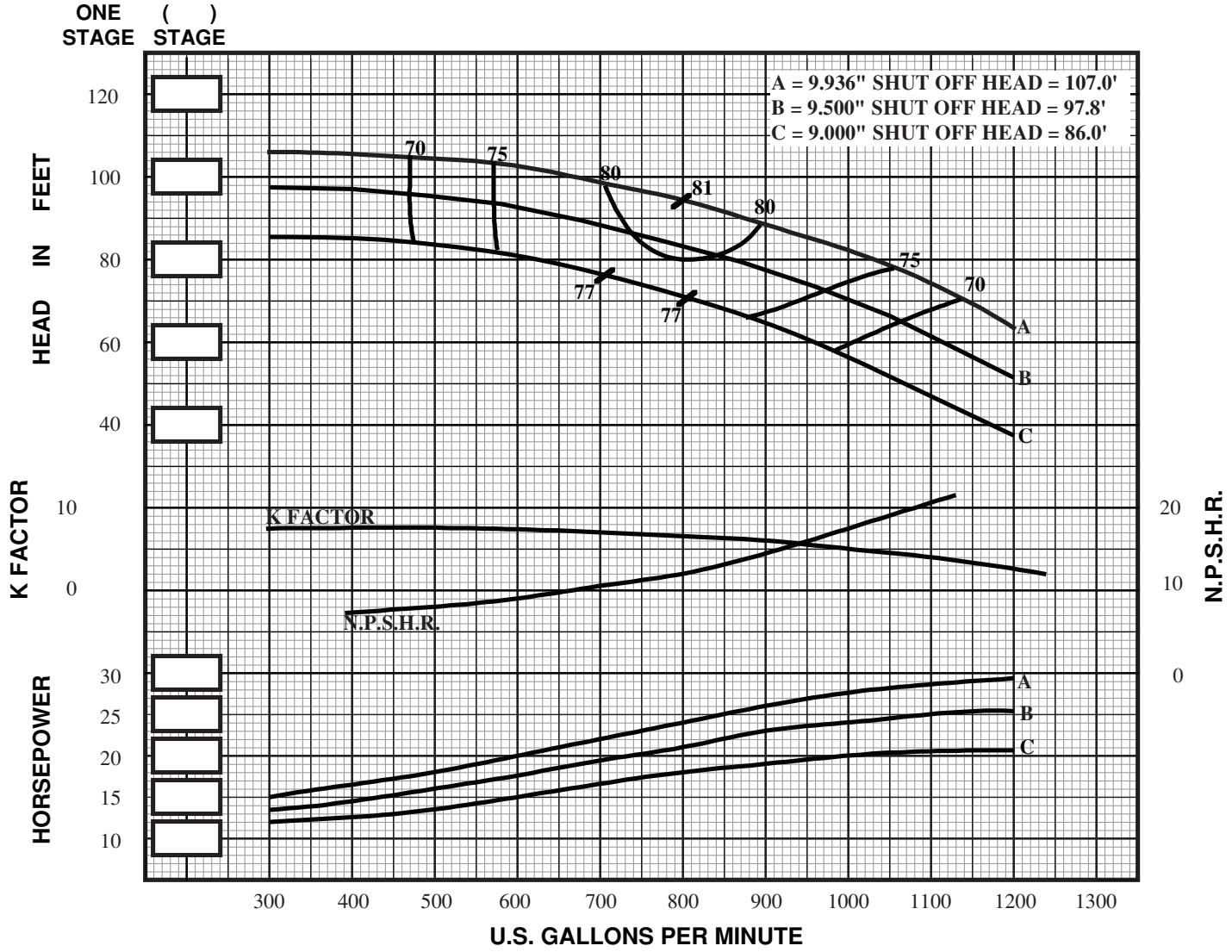

IMPELLER TYPE	= ENCLOSED	STD. SHAFT DIA.	= 1.687"	NO. STAGES	EFF. CHANGE	MATERIAL	B.E.P. EFF. CHANGE
IMPELLER NO.	= SP12H	MAX. SHAFT DIA.	= 1.687"				
IMPELLER WT. - LBS.	= 15.9	STD. LATERAL	= 1.00"	1	-3	IMP. - C.I.	-1
ONE STAGE WT. - LBS.	= 260.0	DISCHARGE SIZES	= 6"/ 8"/ 10"	2	-2	IMP. - NI-RI	-2
ADD'L STAGE WT. - LBS.	= 120.0	SUCTION SIZES	= 8"/ BELL	3	-1	IMP. - S.S.	-2
MAX. SPHERE SIZE	= .75"	ONE STAGE WR^2	= .790	4	0	BOWL - BRZ.	-1
MIN. SUBMERGENCE*	= 16"		=	5	0	BOWL - NI-RI	-1
Δ CONSULT FACTORY			v18.1			BOWL - S.S.	-2

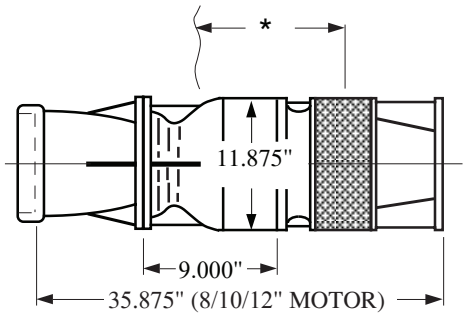

SUBMERSIBLE TURBINE

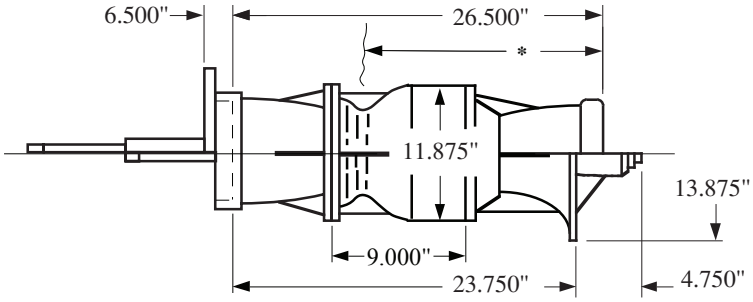

LINESHAFT TURBINE

SIMFLO®

Section 202
Date 9/1/06

SL12M

1770 RPM

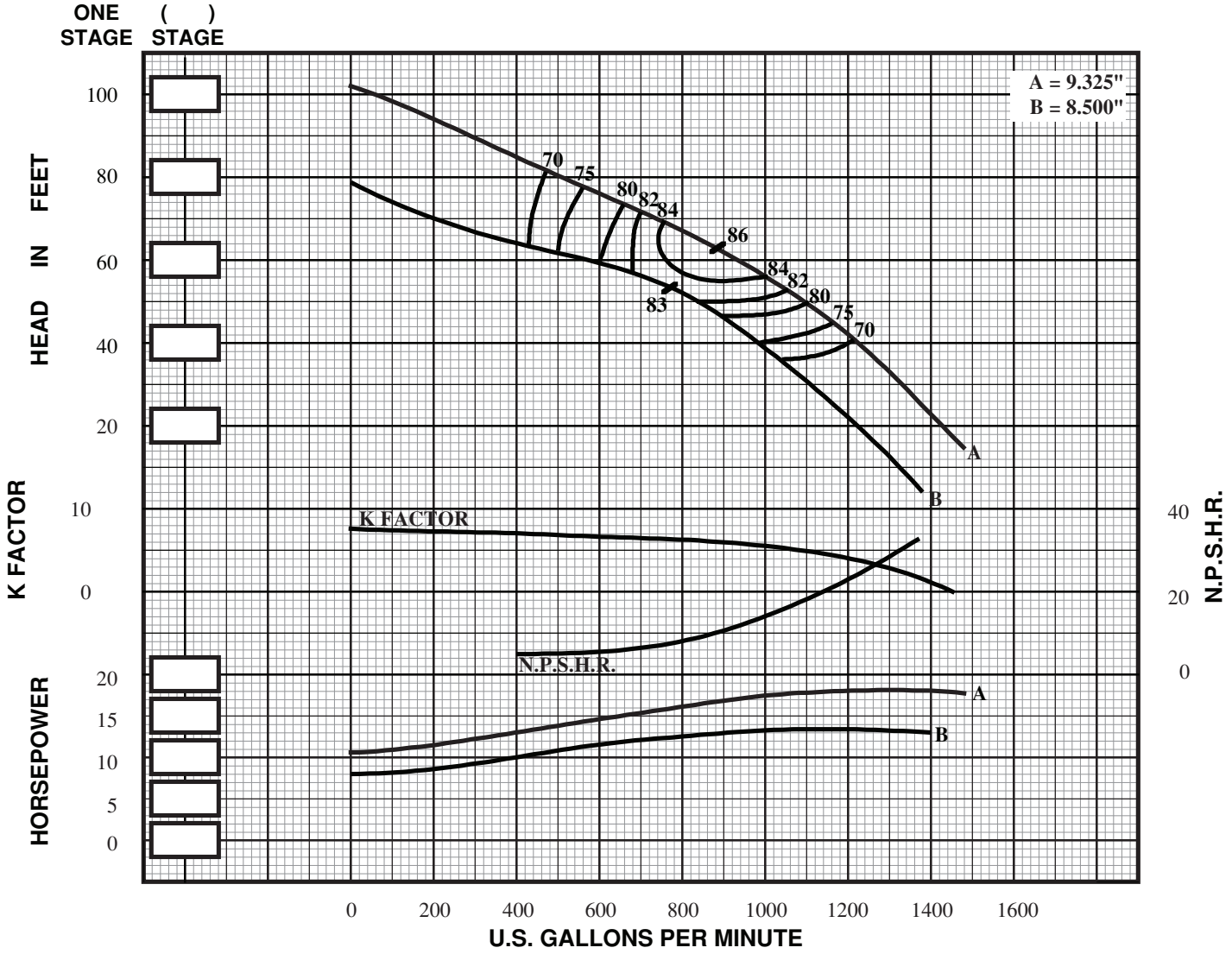

IMPELLER TYPE	= ENCLOSED	STD. SHAFT DIA.	= 1.687"	NO. STAGES	EFF. CHANGE	MATERIAL	B.E.P. EFF. CHANGE
IMPELLER NO.	= SL12M	MAX. SHAFT DIA.	= 1.687"				
IMPELLER WT. - LBS.	= 13.2	STD. LATERAL	= 1.13"	1	-3.5	IMP. - C.I.	-3
ONE STAGE WT. - LBS.	= 250.0	DISCHARGE SIZES	= 6"/ 8"/ 10"	2	-2	IMP. - NI-RI	-3
ADD'L STAGE WT. - LBS.	= 107.0	SUCTION SIZES	= 8"/ BELL	3	-1	IMP. - S.S.	-4
MAX. SPHERE SIZE	= .88"	ONE STAGE WR^2	= .670	4	0	BOWL - BRZ.	-2
MIN. SUBMERGENCE*	= 17"		=	5	0	BOWL - NI-RI	-2
Δ CONSULT FACTORY			v18.1			BOWL - S.S.	-3

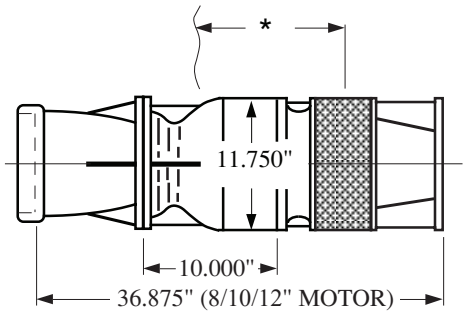

SUBMERSIBLE TURBINE

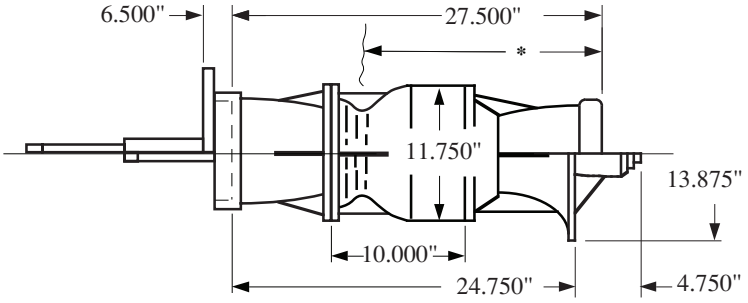

LINESHAFT TURBINE

SIMFLO®

Section 202
Date 9/1/06

SL12H

1770 RPM

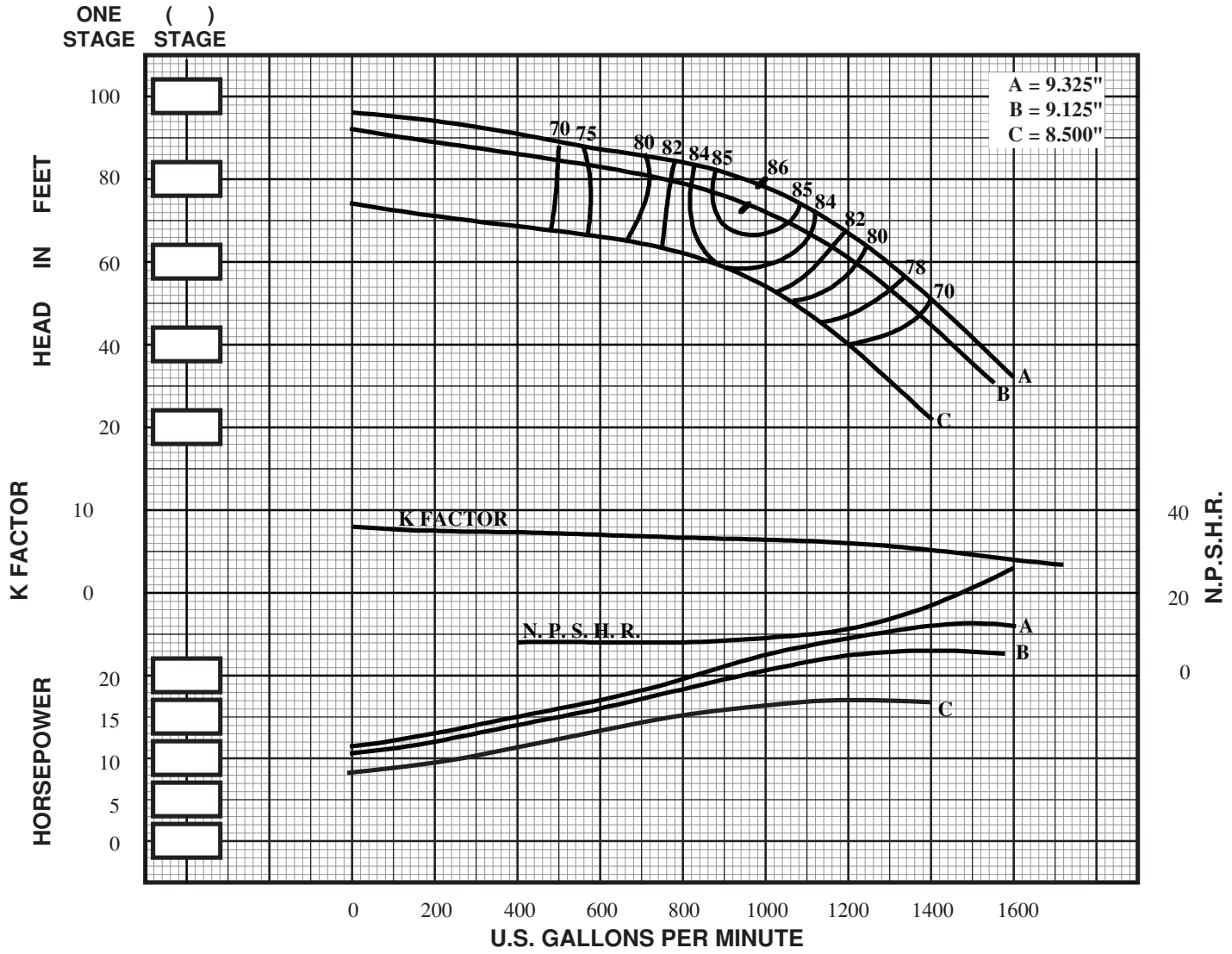

IMPELLER TYPE	= ENCLOSED	STD. SHAFT DIA.	= 1.687"	NO. STAGES	EFF. CHANGE	MATERIAL	B.E.P. EFF. CHANGE
IMPELLER NO.	= SL12H	MAX. SHAFT DIA.	= 1.687"				
IMPELLER WT. - LBS.	= 13.5	STD. LATERAL	= 1.13"	1	-3.5	IMP. - C.I.	-3
ONE STAGE WT. - LBS.	= 250.0	DISCHARGE SIZES	= 6"/ 8"/ 10"	2	-2	IMP. - NI-RI	-3
ADD'L STAGE WT. - LBS.	= 107.0	SUCTION SIZES	= 8"/ BELL	3	-1	IMP. - S.S.	Not Recom.
MAX. SPHERE SIZE	= .88"	ONE STAGE WR^2	= .673	4	0	BOWL - BRZ.	-2
MIN. SUBMERGENCE*	= 17"		=	5	0	BOWL - NI-RI	-2
Δ CONSULT FACTORY			v18.1			BOWL - S.S.	-3

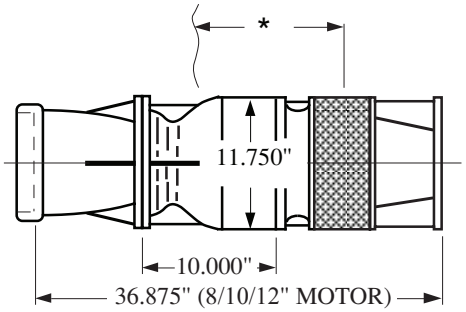

SUBMERSIBLE TURBINE

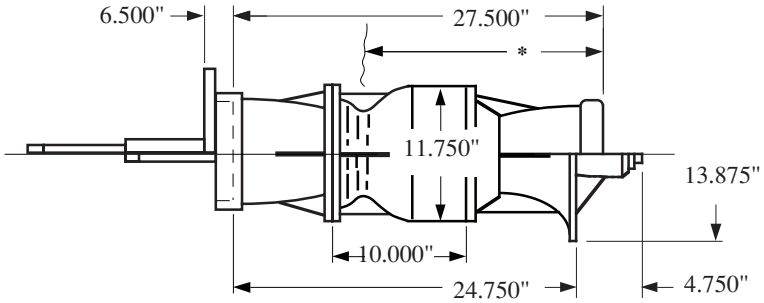

LINESHAFT TURBINE

SIMFLO®

Section 202
Date 1/1/12

SJ12M

1770 RPM

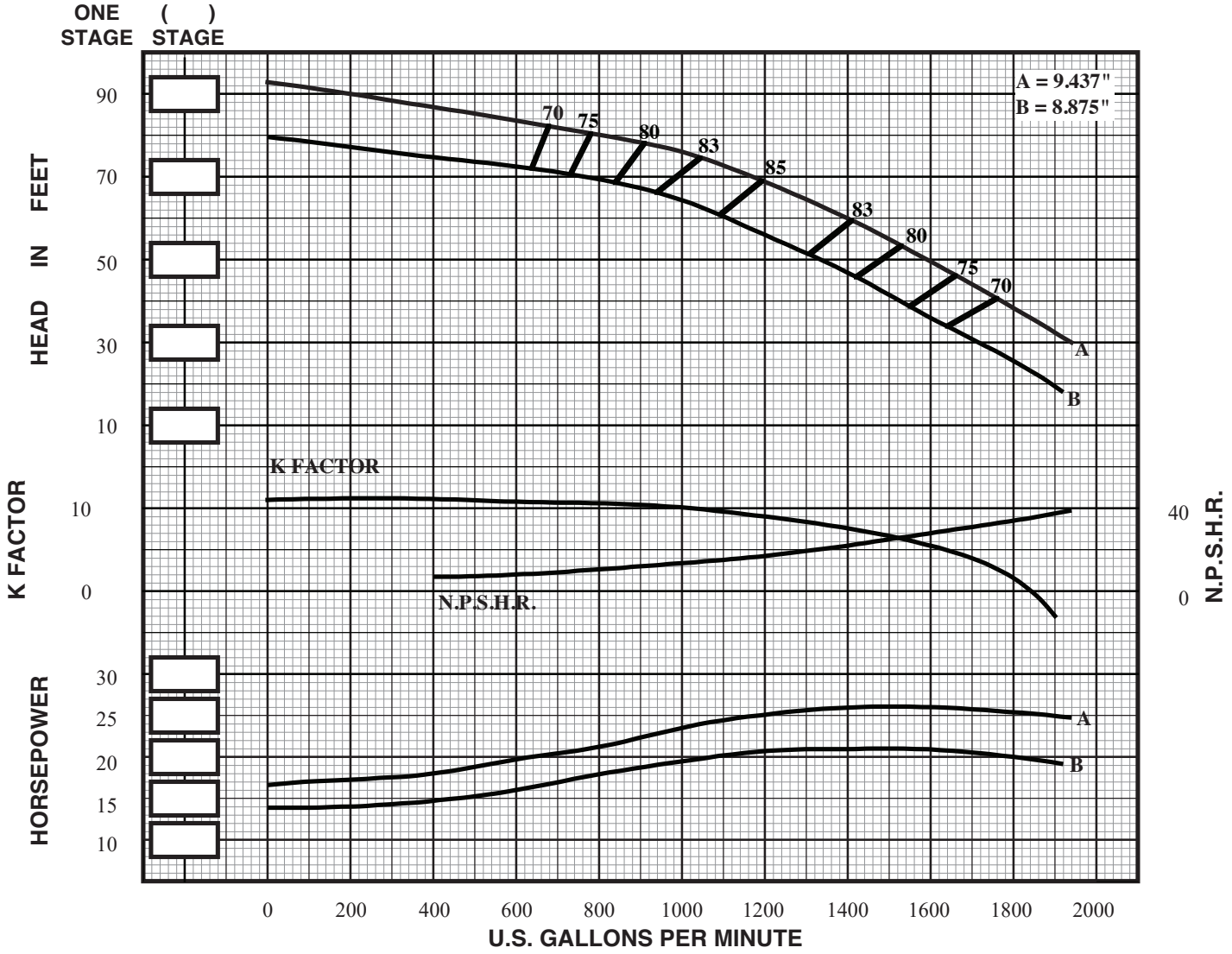

IMPELLER TYPE	= ENCLOSED	STD. SHAFT DIA.	= 1.687"	NO. STAGES	EFF. CHANGE	MATERIAL	B.E.P. EFF. CHANGE
IMPELLER NO.	= SJ12M	MAX. SHAFT DIA.	= 1.687"				
IMPELLER WT. - LBS.	= 17.0	STD. LATERAL	= 1.19"	1	-2	IMP. - C.I.	0
ONE STAGE WT. - LBS.	= 270.0	DISCHARGE SIZES	= 8"/ 10"	2	-1	IMP. - NI-RI	-2
ADD'L STAGE WT. - LBS.	= 110.0	SUCTION SIZES	= 8"/ BELL	3	0	IMP. - S.S.	-1
MAX. SPHERE SIZE	= .88"	ONE STAGE WR^2	= .804	4	0	BOWL - BRZ.	-1
MIN. SUBMERGENCE*	= 16"		=	5	0	BOWL - NI-RI	-1
Δ CONSULT FACTORY			v18.1			BOWL - S.S.	-2

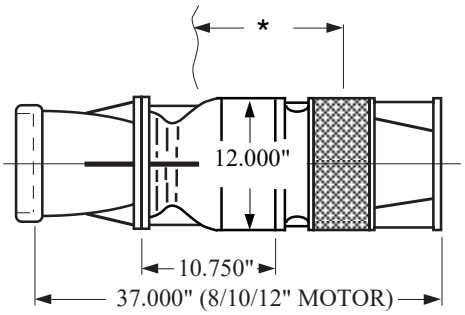

SUBMERSIBLE TURBINE

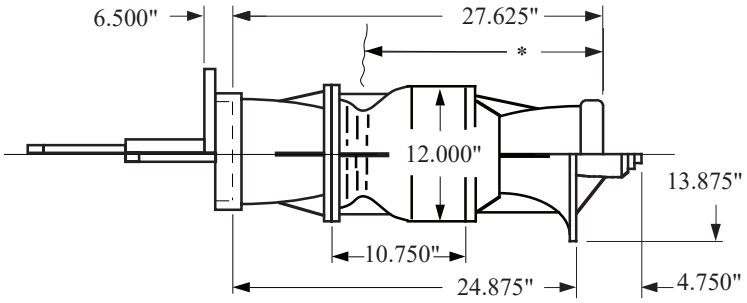

LINESHAFT TURBINE

SIMFLO®

Section 202
Date 9/1/06

SJ12H

1770 RPM

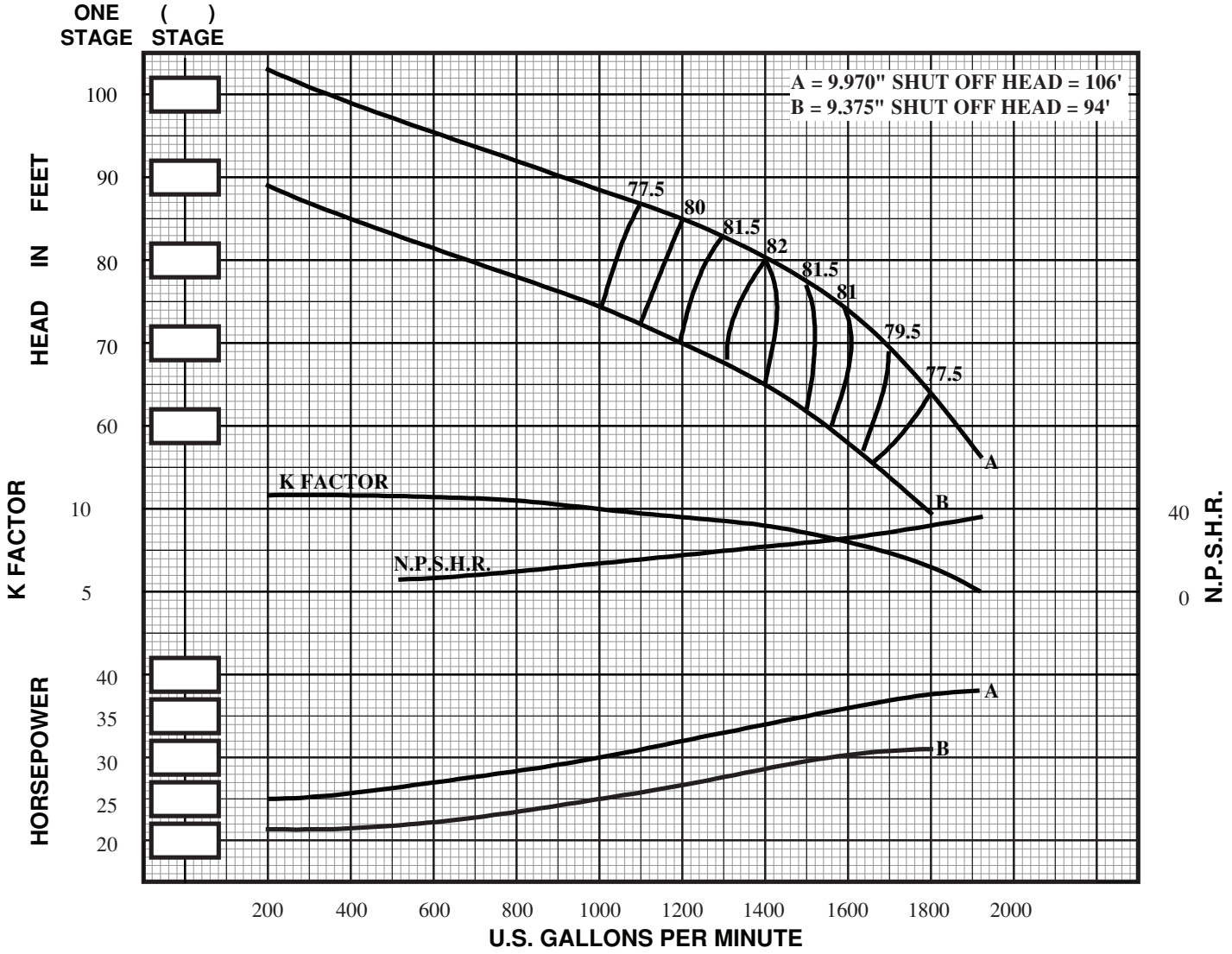

IMPELLER TYPE	= ENCLOSED	STD. SHAFT DIA.	= 1.687"	NO. STAGES	EFF. CHANGE	MATERIAL	B.E.P. EFF. CHANGE
IMPELLER NO.	= SJ12H	MAX. SHAFT DIA.	= 1.687"				
IMPELLER WT. - LBS.	= 15.2	STD. LATERAL	= 1.19"	1	-1	IMP. - C.I.	0
ONE STAGE WT. - LBS.	= 270.0	DISCHARGE SIZES	= 8"/ 10"	2	0	IMP. - NI-RI	-2
ADD'L STAGE WT. - LBS.	= 110.0	SUCTION SIZES	= 8"/ BELL	3	0	IMP. - S.S.	-1
MAX. SPHERE SIZE	= .88"	ONE STAGE WR^2	= .744	4	0	BOWL - BRZ.	-1
MIN. SUBMERGENCE*	= 16"		=	5	0	BOWL - NI-RI	-1
Δ CONSULT FACTORY			v18.1			BOWL - S.S.	-2

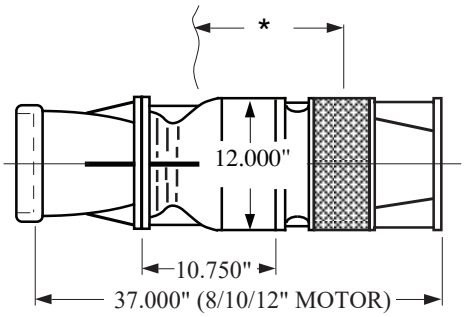

SUBMERSIBLE TURBINE

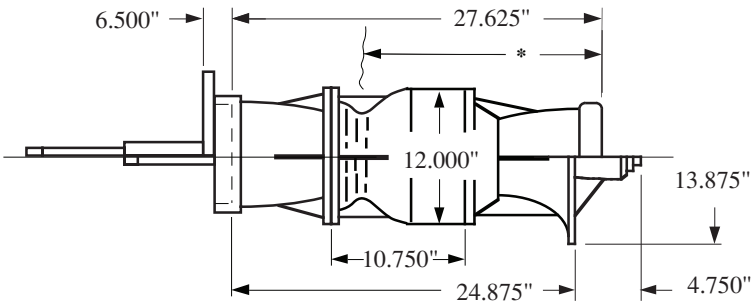

LINESHAFT TURBINE

SIMFLO®

Section 202
Date 9/1/06

SM14LL

1770 RPM

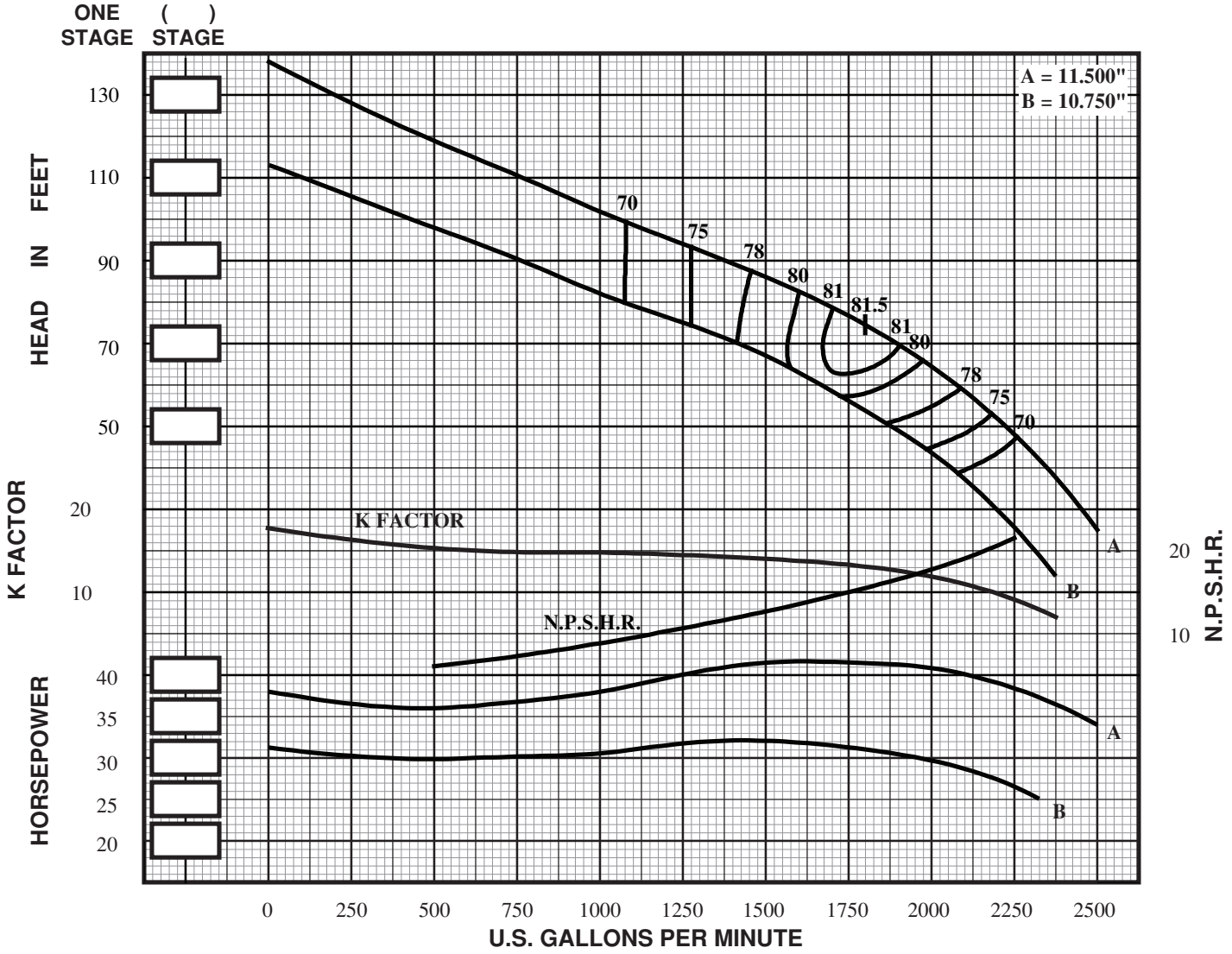

IMPELLER TYPE = ENCLOSED	STD. SHAFT DIA. = 2.187"	NO. STAGES	EFF. CHANGE	MATERIAL	B.E.P. EFF. CHANGE
IMPELLER NO. = SM14LL	MAX. SHAFT DIA. = 2.187"				
IMPELLER WT. - LBS. = 31.0	STD. LATERAL = 1.31"	1	-3	IMP. - C.I.	0
ONE STAGE WT. - LBS. = 550.0	DISCHARGE SIZES = 10"/ 12"	2	-2	IMP. - NI-RI	-2
ADD'L STAGE WT. - LBS. = 235.0	SUCTION SIZES = 10"/ BELL	3	-1	IMP. - S.S.	-2
MAX. SPHERE SIZE = 1.44"	ONE STAGE WR^2 = 2.211	4	0	BOWL - BRZ.	-1
MIN. SUBMERGENCE* = 19"	=	5	0	BOWL - NI-RI	-1
Δ CONSULT FACTORY	v18.1			BOWL - S.S.	-2

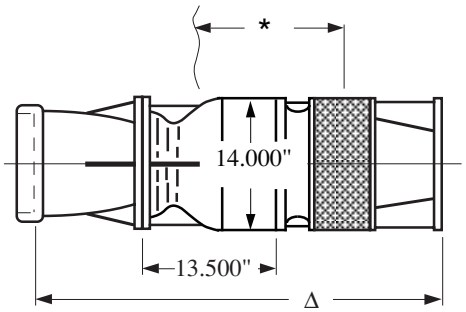

SUBMERSIBLE TURBINE

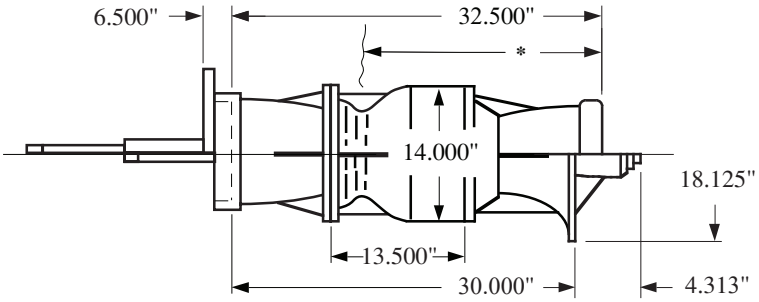

LINESHAFT TURBINE

SIMFLO®

Section 202
Date 2/10/10

SM14L

1770 RPM

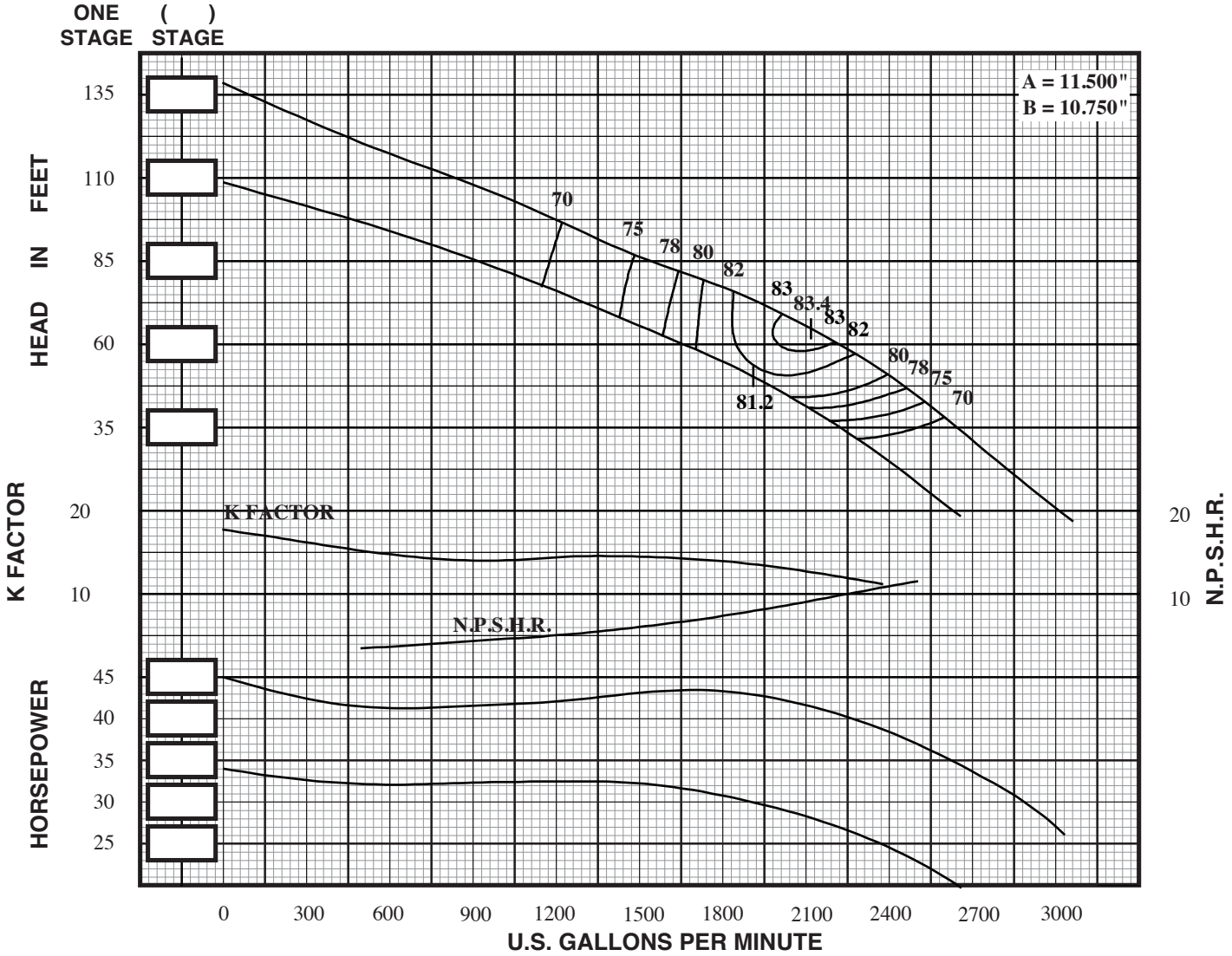

IMPELLER TYPE	= ENCLOSED	STD. SHAFT DIA.	= 2.187"	NO. STAGES	EFF. CHANGE	MATERIAL	B.E.P. EFF. CHANGE
IMPELLER NO.	= SM14L	MAX. SHAFT DIA.	= 2.187"				
IMPELLER WT. - LBS.	= 27.4	STD. LATERAL	= 1.31"	1	-3	IMP. - C.I.	0
ONE STAGE WT. - LBS.	= 540.0	DISCHARGE SIZES	= 10"/ 12"	2	-2	IMP. - NI-RI	-2
ADD'L STAGE WT. - LBS.	= 225.0	SUCTION SIZES	= 10"/ BELL	3	-1	IMP. - S.S.	-2
MAX. SPHERE SIZE	= 1.31"	ONE STAGE WR^2	= 1.933	4	0	BOWL - BRZ.	-1
MIN. SUBMERGENCE*	= 19"		=	5	0	BOWL - NI-RI	-1
Δ CONSULT FACTORY			v18.1			BOWL - S.S.	-2

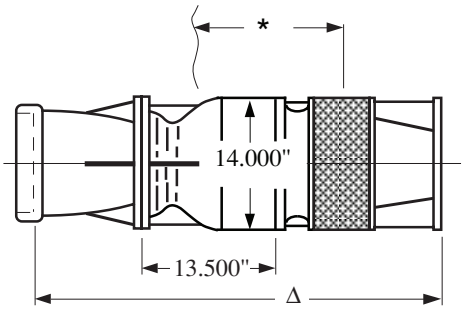

SUBMERSIBLE TURBINE

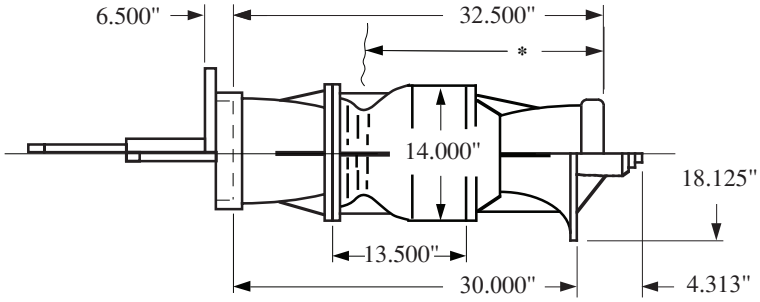

LINESHAFT TURBINE

SIMFLO®

Section 202
Date 9/1/06

SM14M

1770 RPM

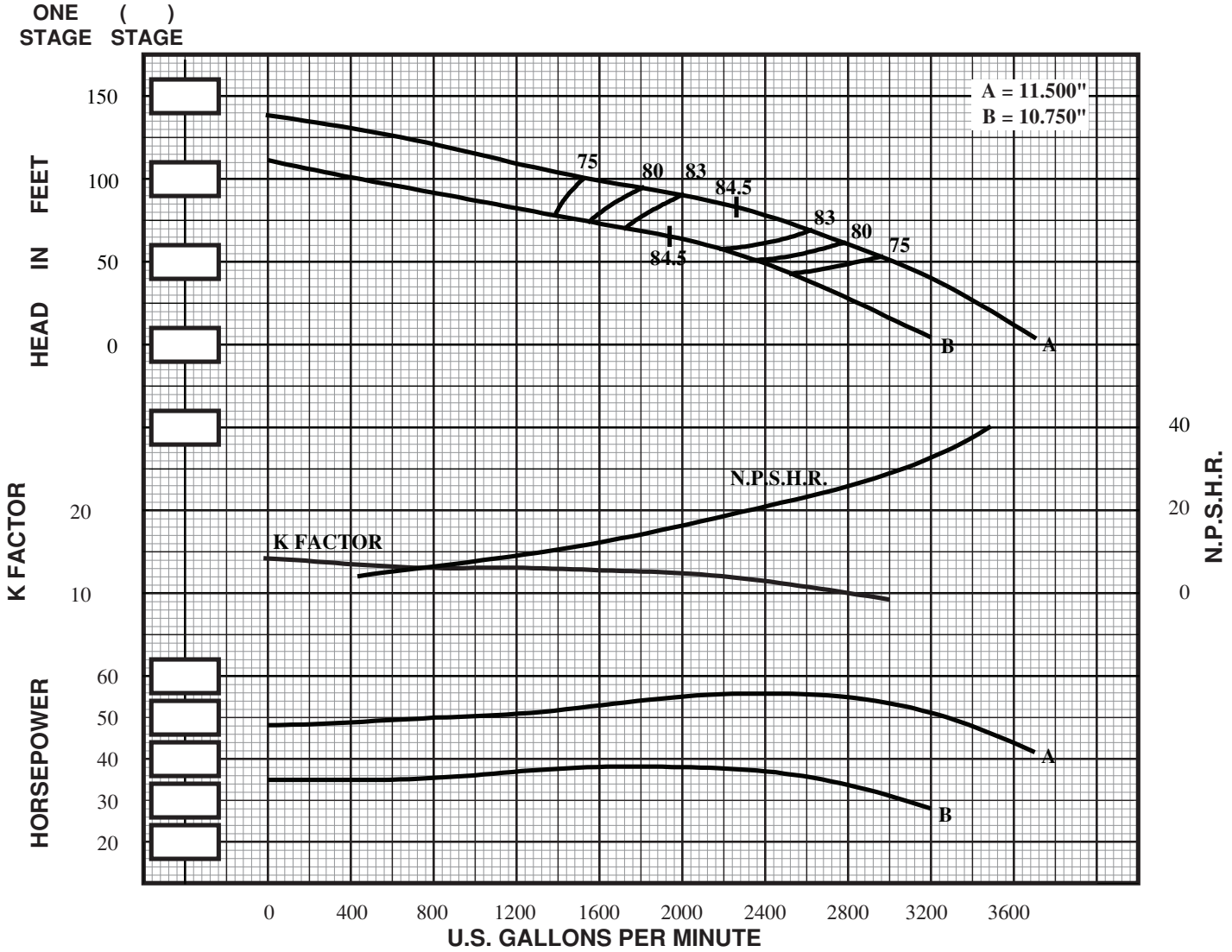

IMPELLER TYPE	= ENCLOSED	STD. SHAFT DIA.	= 2.187"	NO. STAGES	EFF. CHANGE	MATERIAL	B.E.P. EFF. CHANGE
IMPELLER NO.	= SM14M	MAX. SHAFT DIA.	= 2.187"				
IMPELLER WT. - LBS.	= 31.7	STD. LATERAL	= 1.31"	1	-3	IMP. - C.I.	0
ONE STAGE WT. - LBS.	= 550.0	DISCHARGE SIZES	= 10"/ 12"	2	-1	IMP. - NI-RI	-2
ADD'L STAGE WT. - LBS.	= 235.0	SUCTION SIZES	= 10"/ BELL	3	0	IMP. - S.S.	-2
MAX. SPHERE SIZE	= 1.31"	ONE STAGE WR^2	= 2.182	4	0	BOWL - BRZ.	-2
MIN. SUBMERGENCE*	= 19"		=	5	0	BOWL - NI-RI	-1
Δ CONSULT FACTORY			v18.1			BOWL - S.S.	-2

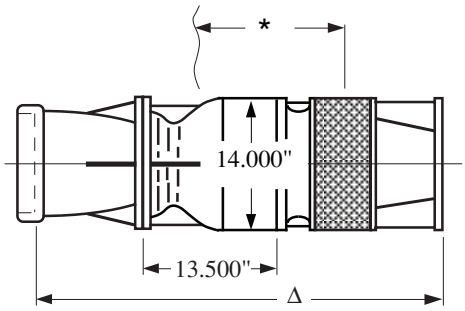

SUBMERSIBLE TURBINE

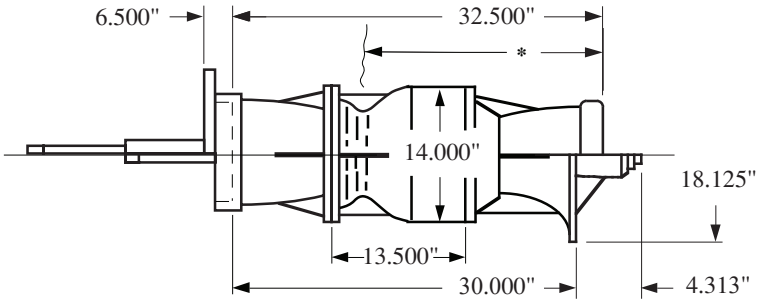

LINESHAFT TURBINE

SIMFLO®

Section 202
Date 9/1/06

SM14H

1770 RPM

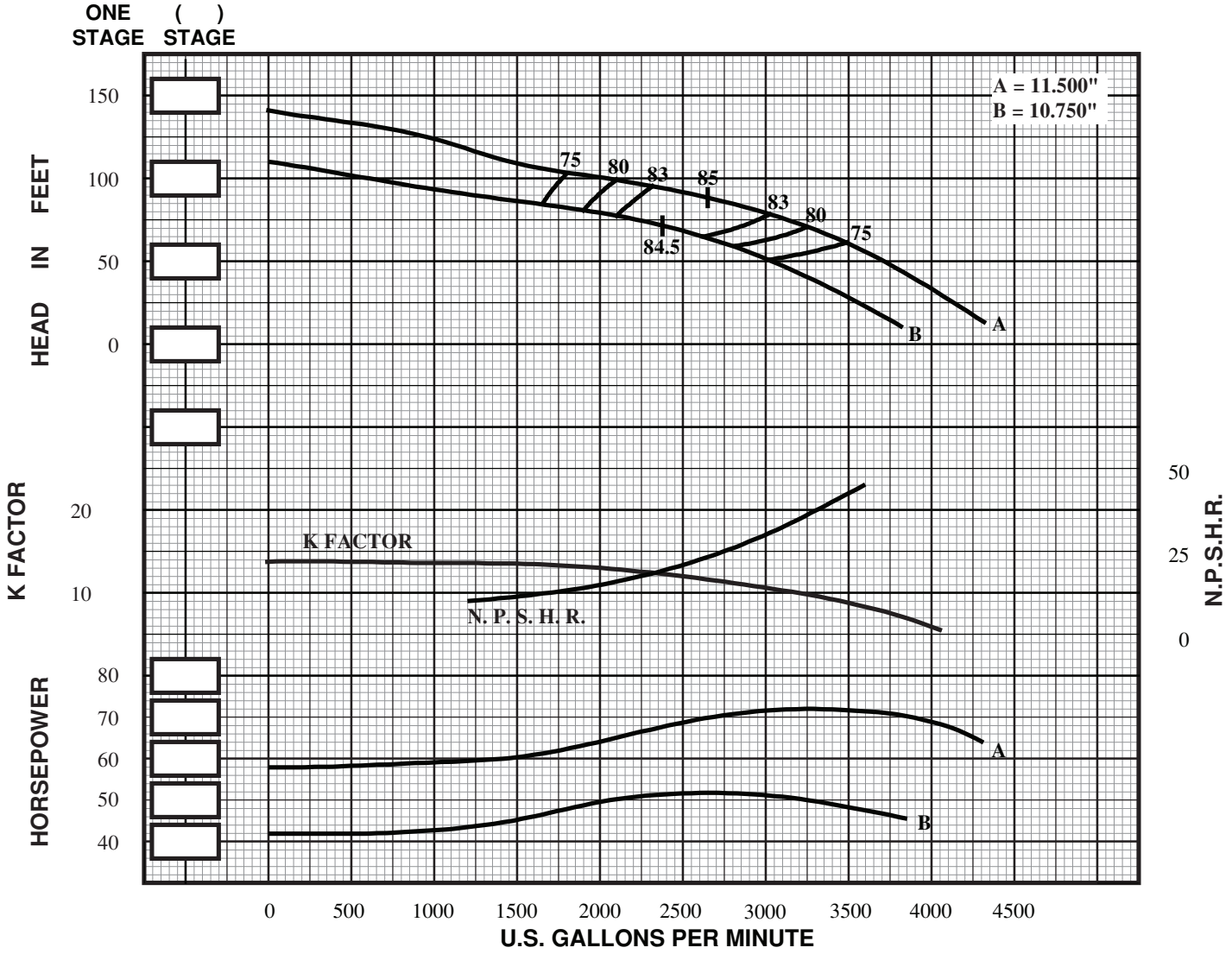

IMPELLER TYPE	= ENCLOSED	STD. SHAFT DIA.	= 2.187"	NO. STAGES	EFF. CHANGE	MATERIAL	B.E.P. EFF. CHANGE
IMPELLER NO.	= SM14H	MAX. SHAFT DIA.	= 2.187"				
IMPELLER WT. - LBS.	= 29.0	STD. LATERAL	= 1.31"	1	-2	IMP. - C.I.	0
ONE STAGE WT. - LBS.	= 550.0	DISCHARGE SIZES	= 10"/ 12"	2	-1	IMP. - NI-RI	-2
ADD'L STAGE WT. - LBS.	= 235.0	SUCTION SIZES	= 10"/ BELL	3	0	IMP. - S.S.	-2
MAX. SPHERE SIZE	= 1.56"	ONE STAGE WR^2	= 2.023	4	0	BOWL - BRZ.	-1
MIN. SUBMERGENCE*	= 19"		=	5	0	BOWL - NI-RI	-1
Δ CONSULT FACTORY			v18.1			BOWL - S.S.	-2

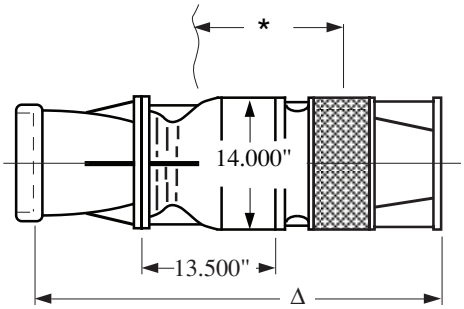

SUBMERSIBLE TURBINE

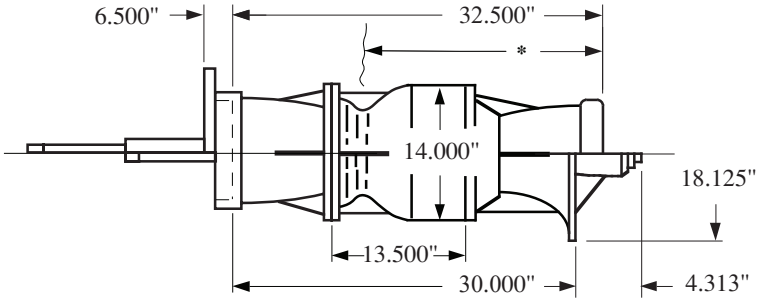

LINESHAFT TURBINE

SIMFLO®

Section 202
Date 9/1/06

SM14HH

1770 RPM

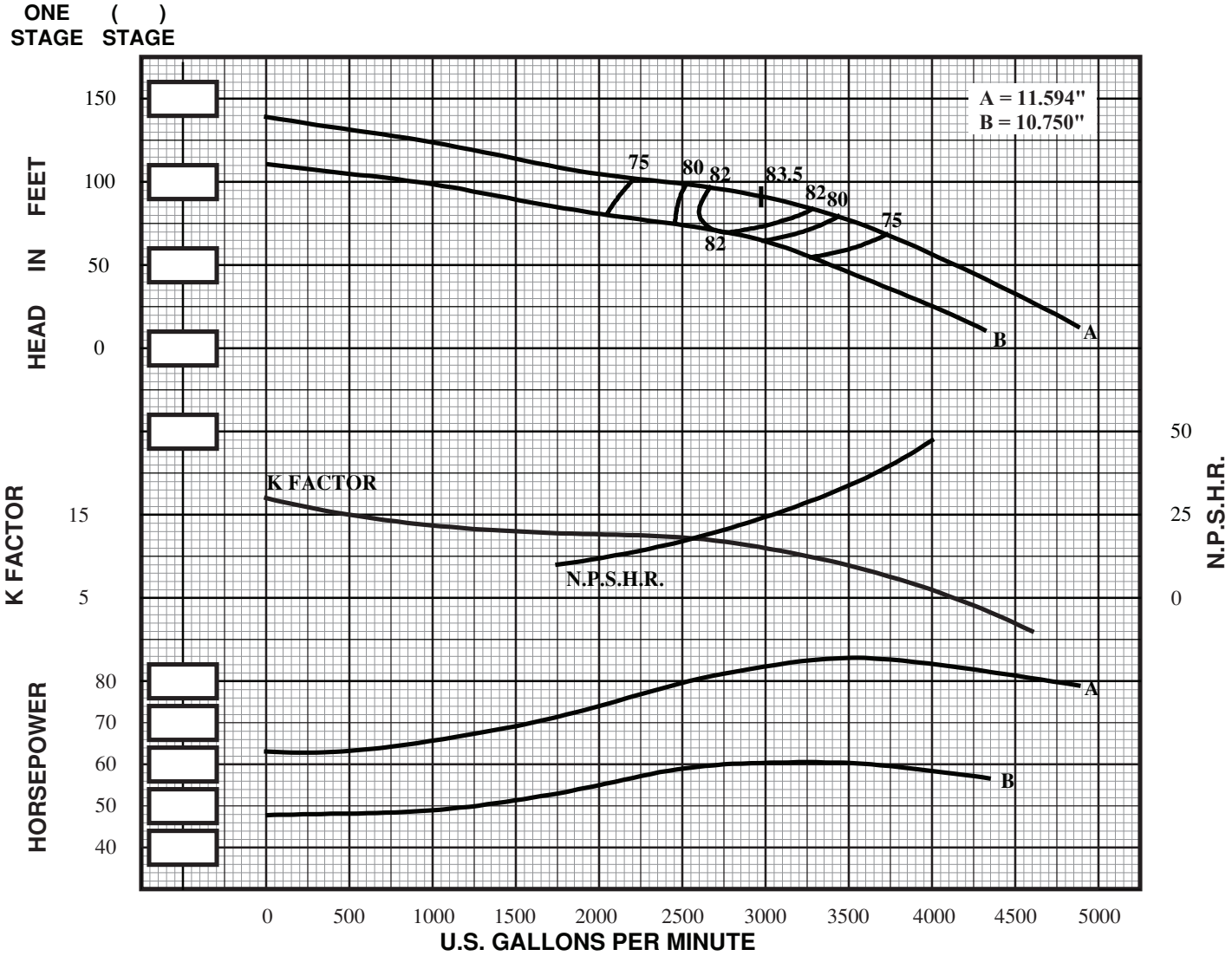

				NO. STAGES	EFF. CHANGE	MATERIAL	B.E.P. EFF. CHANGE
IMPELLER TYPE	= ENCLOSED	STD. SHAFT DIA.	= 2.187"				
IMPELLER NO.	= SM14HH	MAX. SHAFT DIA.	= 2.187"				
IMPELLER WT. - LBS.	= 28.4	STD. LATERAL	= 1.25"	1	-2.5	IMP. - C.I.	-.5
ONE STAGE WT. - LBS.	= 540	DISCHARGE SIZES	= 10"/ 12"	2	-1.5	IMP. - NI-RI	-2
ADD'L STAGE WT. - LBS.	= 225	SUCTION SIZES	= 10"/ BELL	3	-.5	IMP. - S.S.	-3
MAX. SPHERE SIZE	= 1.25"	ONE STAGE WR^2	= 2.300	4	0	BOWL - BRZ.	-1
MIN. SUBMERGENCE*	= 19"		=	5	0	BOWL - NI-RI	-1
Δ CONSULT FACTORY			v18.1			BOWL - S.S.	-2

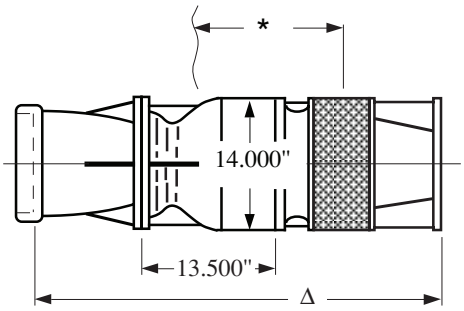

SUBMERSIBLE TURBINE

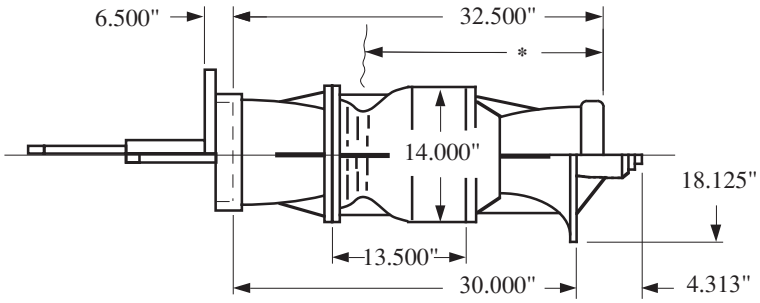

LINESHAFT TURBINE

SIMFLO®

Section 202
Date 9/1/06

SM16MO

1770 RPM

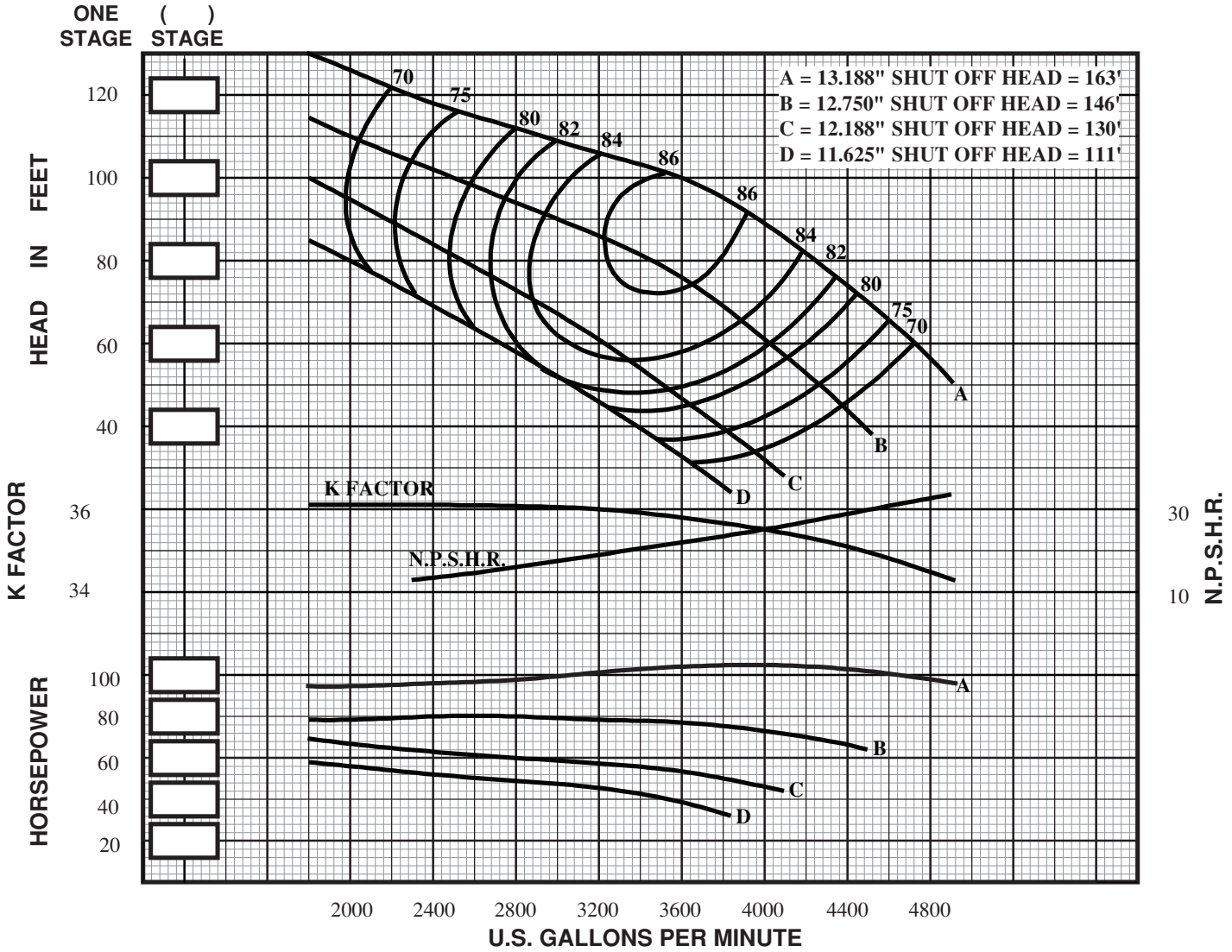

IMPELLER TYPE	= SEMI-OPEN	STD. SHAFT DIA.	= 2.187"	NO. STAGES	EFF. CHANGE	MATERIAL	B.E.P. EFF. CHANGE
IMPELLER NO.	=SM16MO	MAX. SHAFT DIA.	= 2.187"				
IMPELLER WT. - LBS.	= 24.0	STD. LATERAL	= 1.34"	1	-3	IMP. - C.I.	0
ONE STAGE WT. - LBS.	= 600.0	DISCHARGE SIZES	= 12"/ 14"	2	-2	IMP. - NI-RI	-2
ADD'L STAGE WT. - LBS.	= 250.0	SUCTION SIZES	= 12"/ BELL	3	-1	IMP. - S.S.	-1
MAX. SPHERE SIZE	= 1.19"	ONE STAGE WR^2	= 2.260	4	0	BOWL - BRZ.	-1
MIN. SUBMERGENCE*	= 35"		=	5	0	BOWL - NI-RI	-1
Δ CONSULT FACTORY			v18.1			BOWL - S.S.	-2

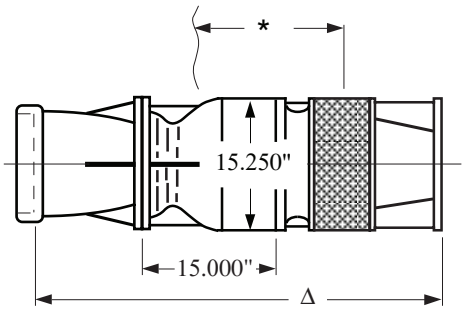

SUBMERSIBLE TURBINE

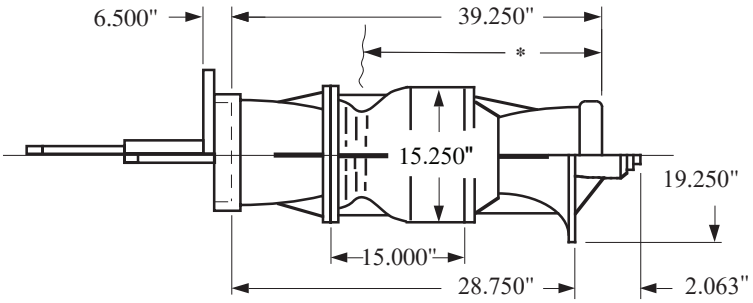

LINESHAFT TURBINE

SIMFLO®

Section 202
Date 9/1/06

SM16HO

1770 RPM

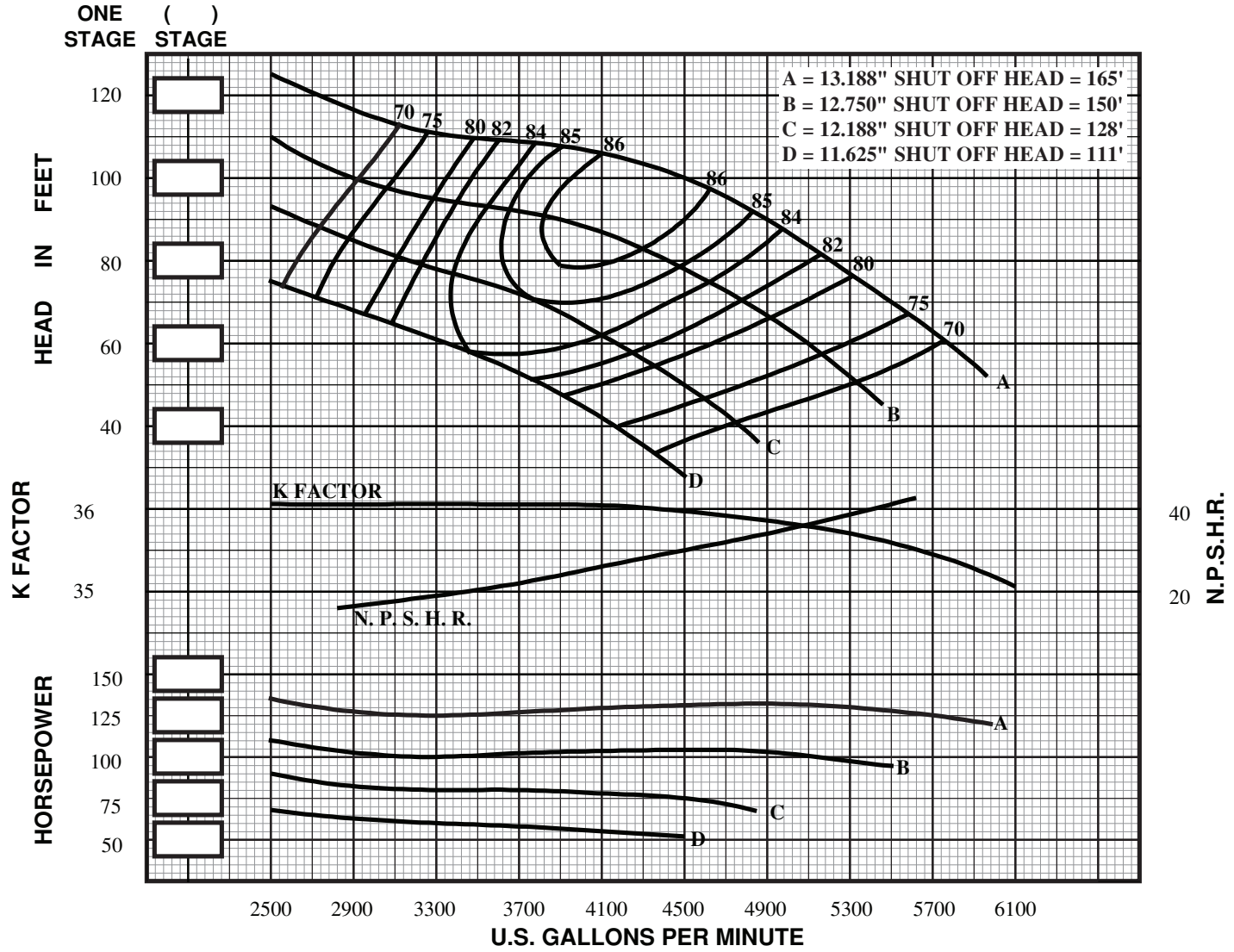

				NO. STAGES	EFF. CHANGE	MATERIAL	B.E.P. EFF. CHANGE
IMPELLER TYPE	= SEMI-OPEN	STD. SHAFT DIA.	= 2.187"				
IMPELLER NO.	= SM16HO	MAX. SHAFT DIA.	= 2.187"				
IMPELLER WT. - LBS.	= 25.0	STD. LATERAL	= 1.06"	1	-3	IMP. - C.I.	-3
ONE STAGE WT. - LBS.	= 600.0	DISCHARGE SIZES	= 12"/ 14"	2	-2	IMP. - NI-RI	-2
ADD'L STAGE WT. - LBS.	= 250.0	SUCTION SIZES	= 12"/ BELL	3	-1	IMP. - S.S.	-1
MAX. SPHERE SIZE	= 1.22"	ONE STAGE WR^2	= 2.240	4	0	BOWL - BRZ.	-2
MIN. SUBMERGENCE*	= 39"		=	5	0	BOWL - NI-RI	-1
Δ CONSULT FACTORY			v18.1			BOWL - S.S.	-2

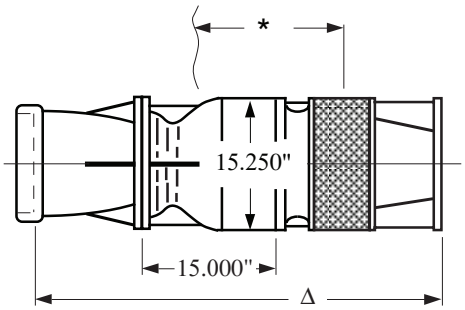

SUBMERSIBLE TURBINE

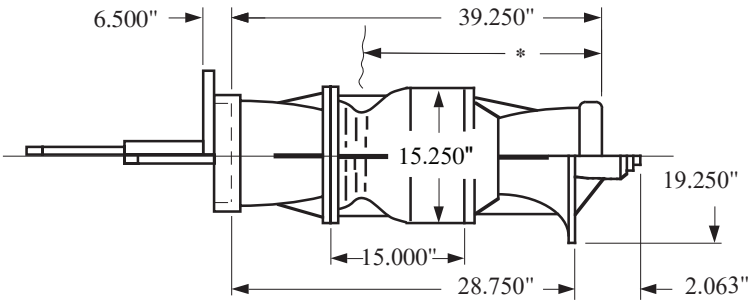

LINESHAFT TURBINE

SIMFLO®

Section 202
Date 9/1/06

SM16M

1770 RPM

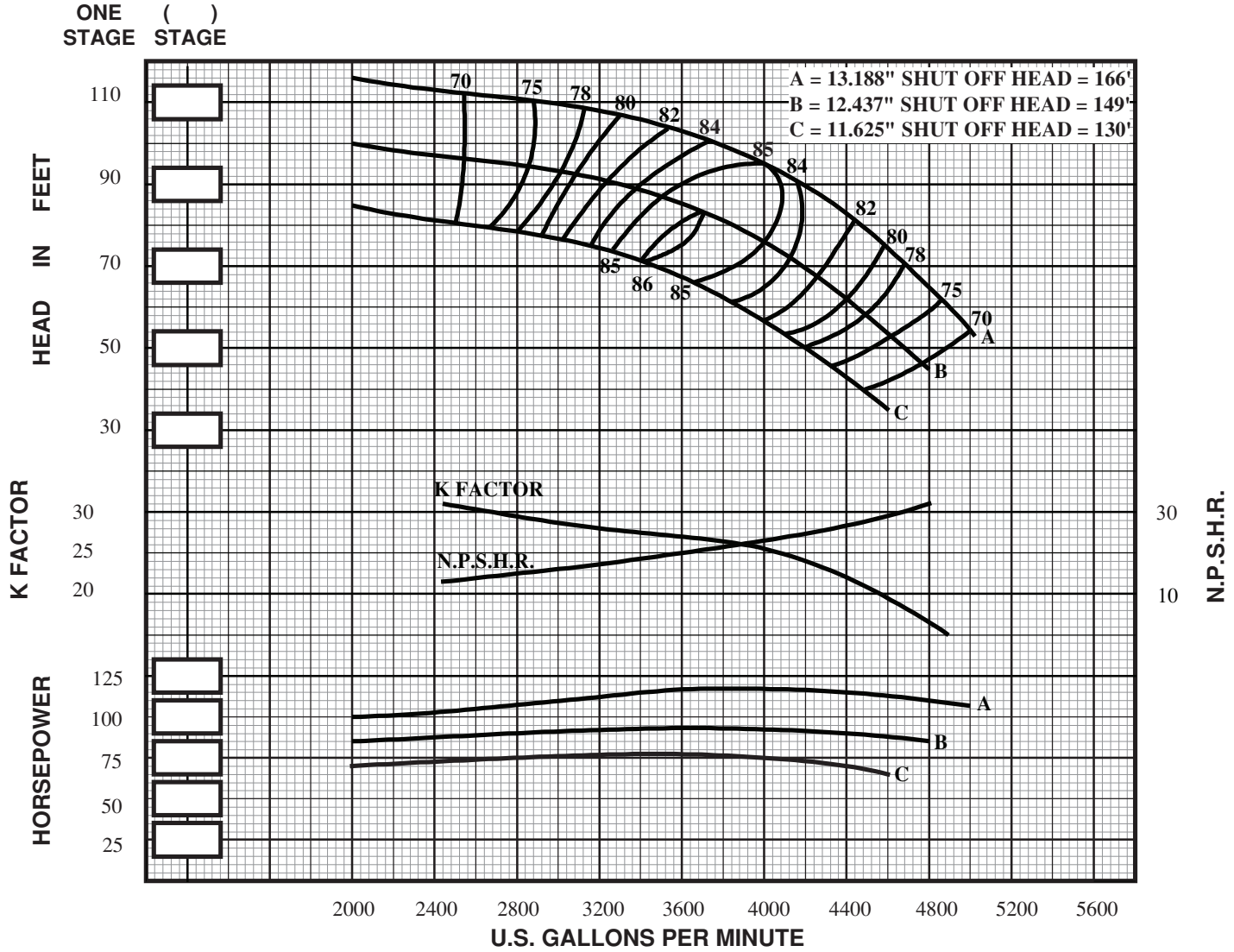

				NO. STAGES	EFF. CHANGE	MATERIAL	B.E.P. EFF. CHANGE
IMPELLER TYPE	= ENCLOSED	STD. SHAFT DIA.	= 2.187"				
IMPELLER NO.	= SM16M	MAX. SHAFT DIA.	= 2.187"				
IMPELLER WT. - LBS.	= 39.0	STD. LATERAL	= .94"	1	-3	IMP. - C.I.	0
ONE STAGE WT. - LBS.	= 600.0	DISCHARGE SIZES	= 12"/ 14"	2	-2	IMP. - NI-RI	-2
ADD'L STAGE WT. - LBS.	= 250.0	SUCTION SIZES	= 12"/ BELL	3	-1	IMP. - S.S.	-1
MAX. SPHERE SIZE	= 1.00"	ONE STAGE WR^2	= 4.966	4	0	BOWL - BRZ.	-1
MIN. SUBMERGENCE*	= 36"		=	5	0	BOWL - NI-RI	-1
Δ CONSULT FACTORY			v18.1			BOWL - S.S.	-2

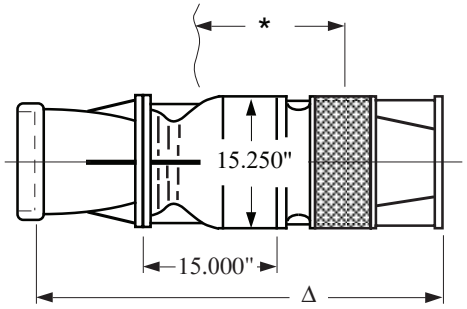

SUBMERSIBLE TURBINE

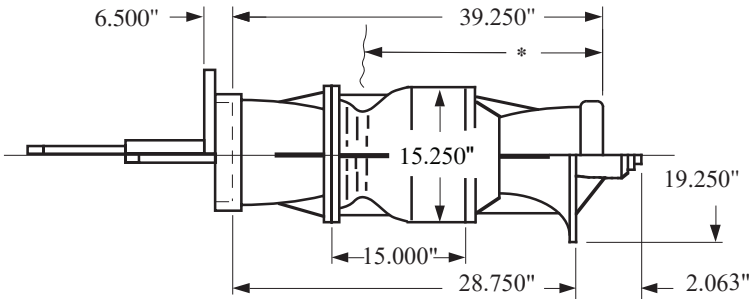

LINESHAFT TURBINE

SIMFLO®

Section 202
Date 9/1/06

SM16H

1770 RPM

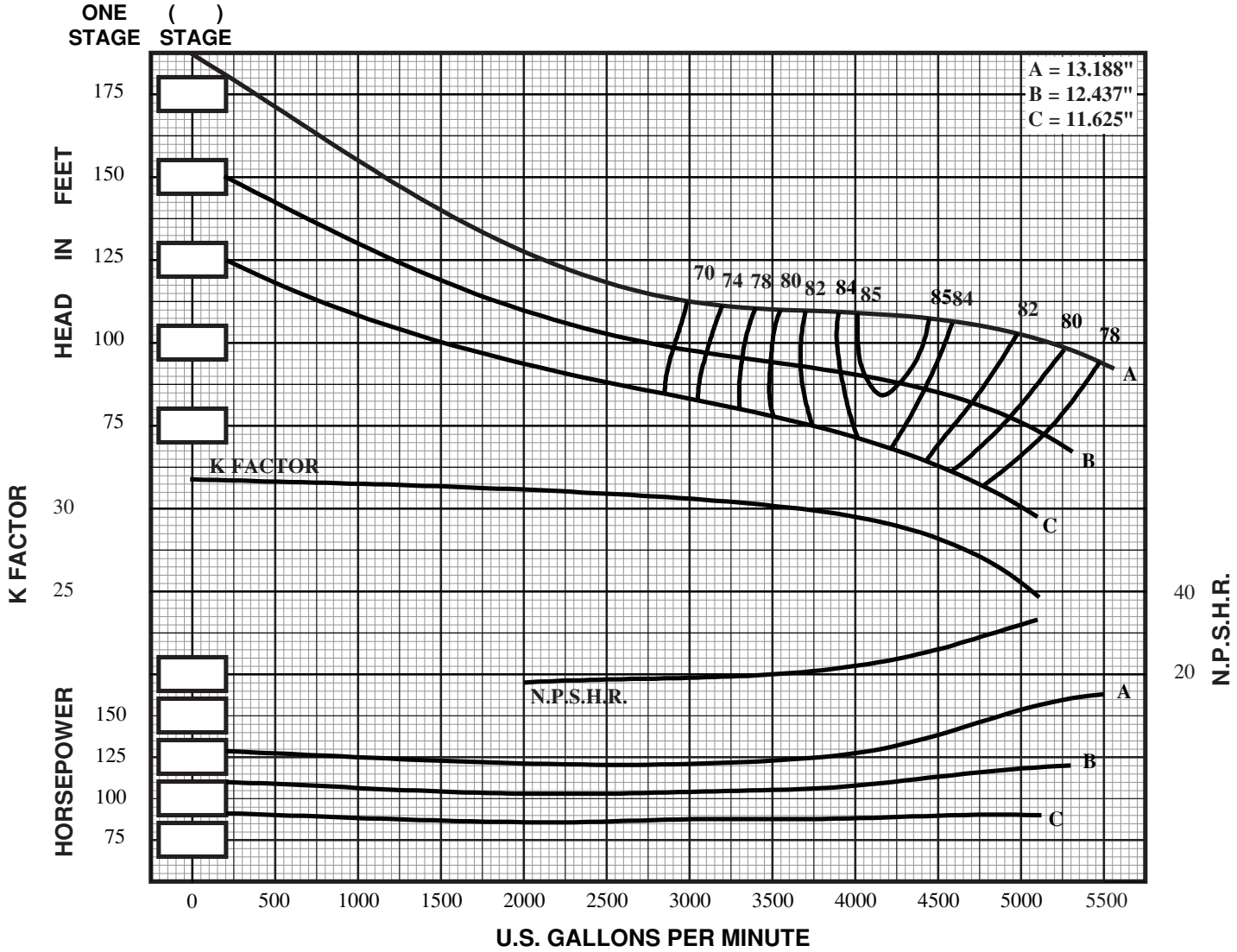

IMPELLER TYPE	= ENCLOSED	STD. SHAFT DIA.	= 2.187"	NO. STAGES	EFF. CHANGE	MATERIAL	B.E.P. EFF. CHANGE
IMPELLER NO.	= SM16H	MAX. SHAFT DIA.	= 2.187"				
IMPELLER WT. - LBS.	= 35.5	STD. LATERAL	= .94"	1	-3	IMP. - C.I.	-3
ONE STAGE WT. - LBS.	= 600.0	DISCHARGE SIZES	= 12"/ 14"	2	-2	IMP. - NI-RI	-2
ADD'L STAGE WT. - LBS.	= 250.0	SUCTION SIZES	= 12"/ BELL	3	-1	IMP. - S.S.	-1
MAX. SPHERE SIZE	= 1.38"	ONE STAGE WR^2	= 4.677	4	0	BOWL - BRZ.	-2
MIN. SUBMERGENCE*	= 39"		=	5	0	BOWL - NI-RI	-1
Δ CONSULT FACTORY			v18.1			BOWL - S.S.	-2

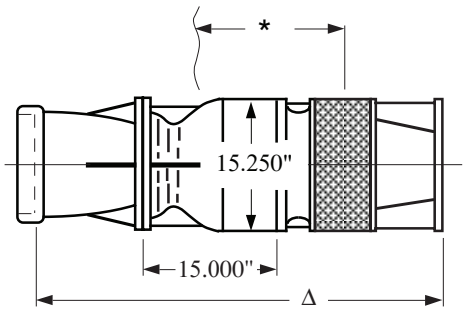

SUBMERSIBLE TURBINE

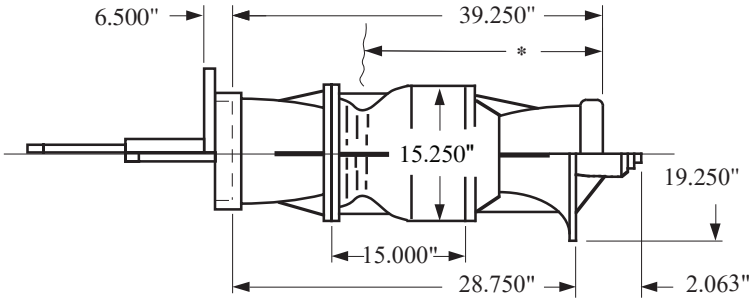

LINESHAFT TURBINE

SIMFLO®

Section 202
Date 9/1/06

SM20M

1770 RPM

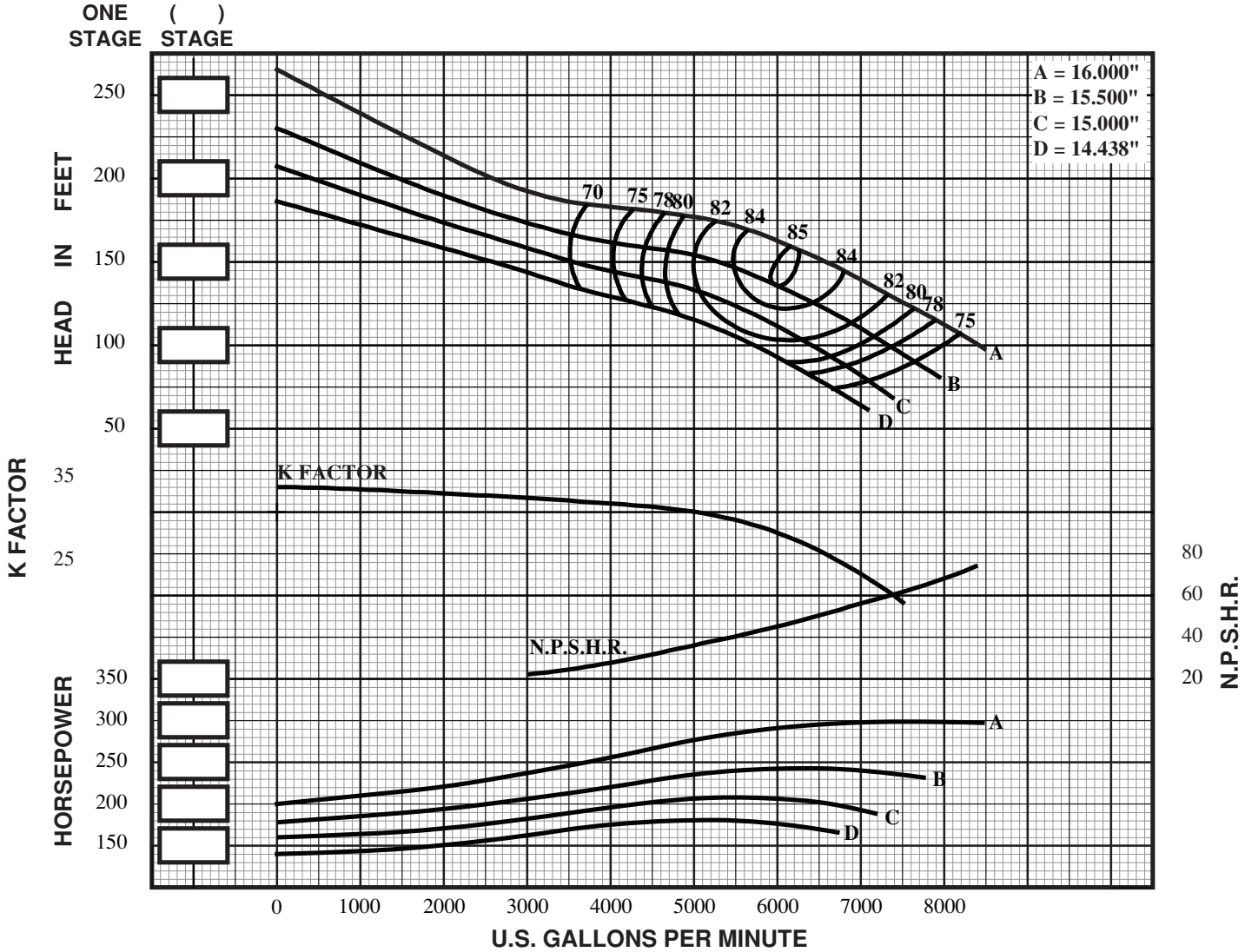

IMPELLER TYPE	= ENCLOSED	STD. SHAFT DIA.	= 2.437"	NO. STAGES	EFF. CHANGE	MATERIAL	B.E.P. EFF. CHANGE
IMPELLER NO.	= SM20M	MAX. SHAFT DIA.	= 2.437"				
IMPELLER WT. - LBS.	= 101.0	STD. LATERAL	= 1.50"	1	-3	IMP. - C.I.	-1
ONE STAGE WT. - LBS.	= 1000.0	DISCHARGE SIZES	= 16"/ Δ	2	-2	IMP. - NI-RI	-1
ADD'L STAGE WT. - LBS.	= 450.0	SUCTION SIZES	= BELL	3	-1	IMP. - S.S.	-1
MAX. SPHERE SIZE	= 1.22"	ONE STAGE WR^2	= 8.220	4	0	BOWL - BRZ.	-1
MIN. SUBMERGENCE*	= 42"		=	5	0	BOWL - NI-RI	-1
Δ CONSULT FACTORY					v18.1	BOWL - S.S.	-1

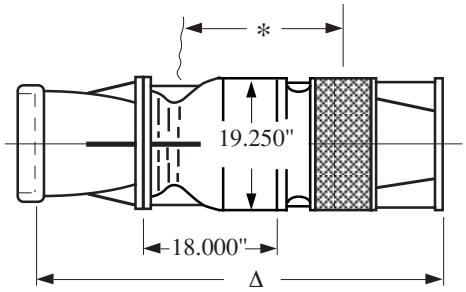

SUBMERSIBLE TURBINE

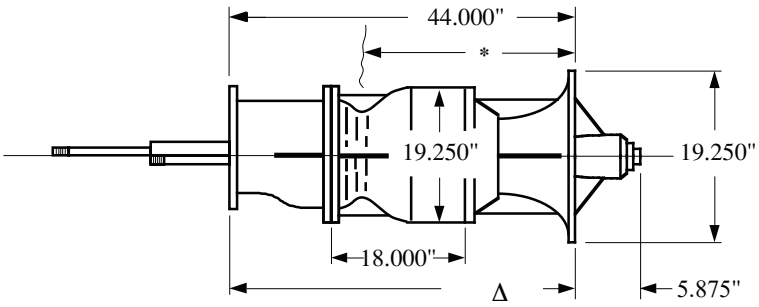

LINESHAFT TURBINE

SIMFLO®

Section 202
Date 9/1/06

SM20H

1770 RPM

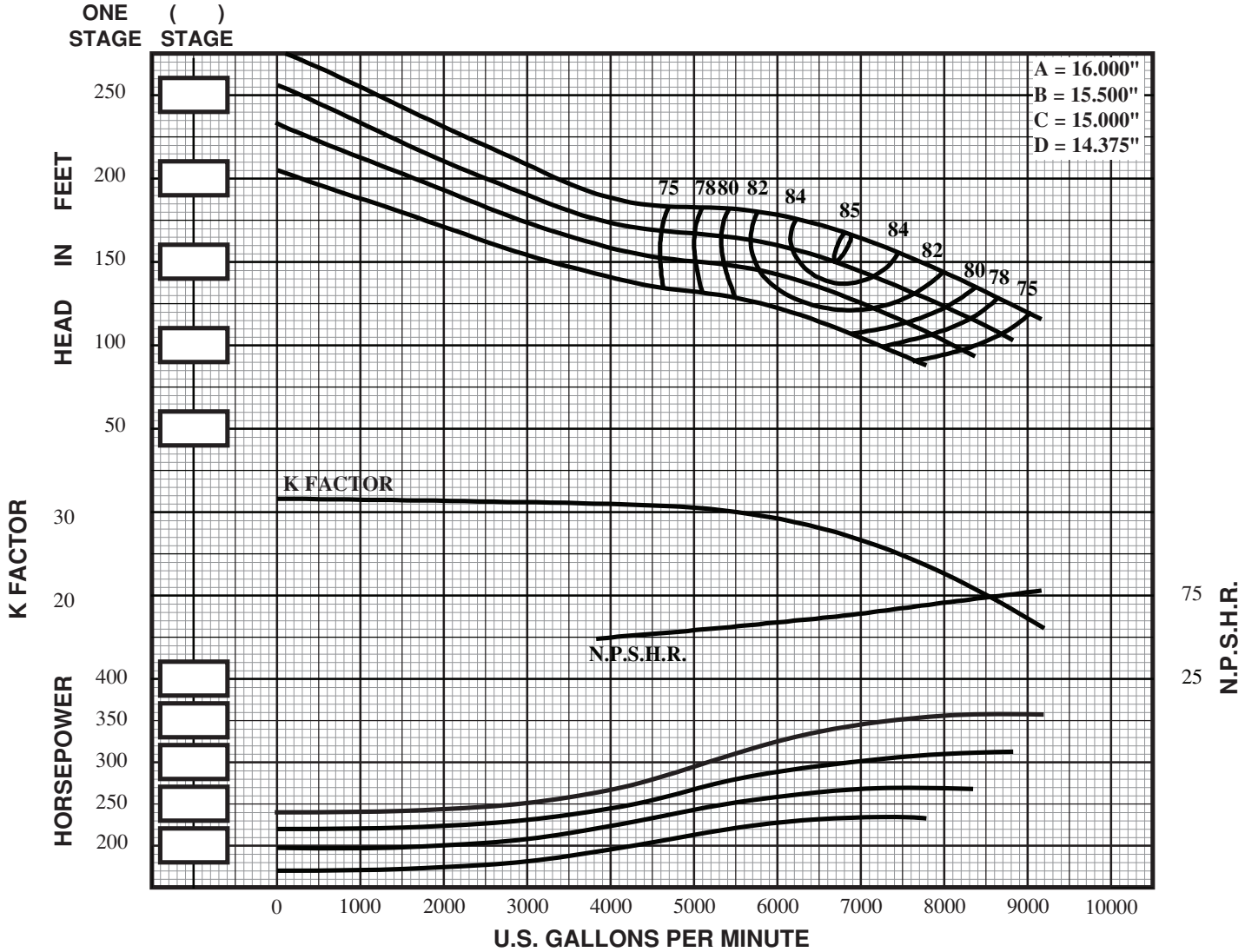

IMPELLER TYPE	=ENCLOSED	STD. SHAFT DIA.	= 2.437"	NO. STAGES	EFF. CHANGE	MATERIAL	B.E.P. EFF. CHANGE
IMPELLER NO.	= SM20H	MAX. SHAFT DIA.	= 2.437"				
IMPELLER WT. - LBS.	= 69.0	STD. LATERAL	= 1.31"	1	-3	IMP. - C.I.	-1
ONE STAGE WT. - LBS.	= 1000.0	DISCHARGE SIZES	= 16"/ Δ	2	-2	IMP. - NI-RI	-1
ADD'L STAGE WT. - LBS.	= 450.0	SUCTION SIZES	= BELL	3	-1	IMP. - S.S.	-1
MAX. SPHERE SIZE	= 1.28"	ONE STAGE WR^2	= 8.210	4	0	BOWL - BRZ.	-1
MIN. SUBMERGENCE*	= 46"		=	5	0	BOWL - NI-RI	-1
Δ CONSULT FACTORY					v18.1	BOWL - S.S.	-1

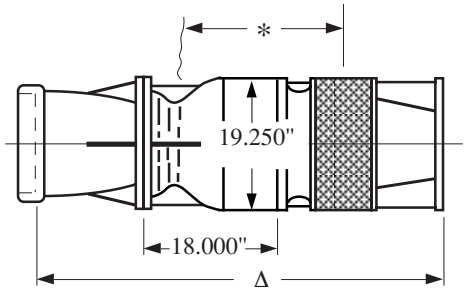

SUBMERSIBLE TURBINE

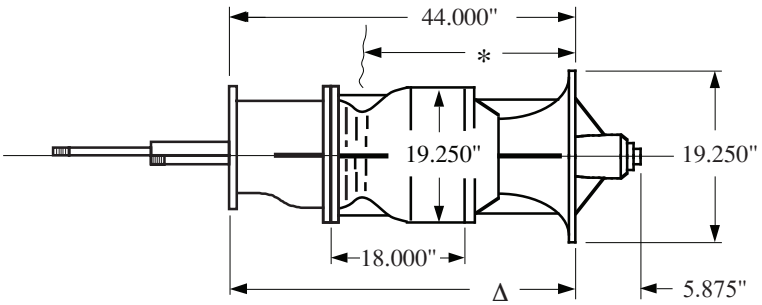

LINESHAFT TURBINE